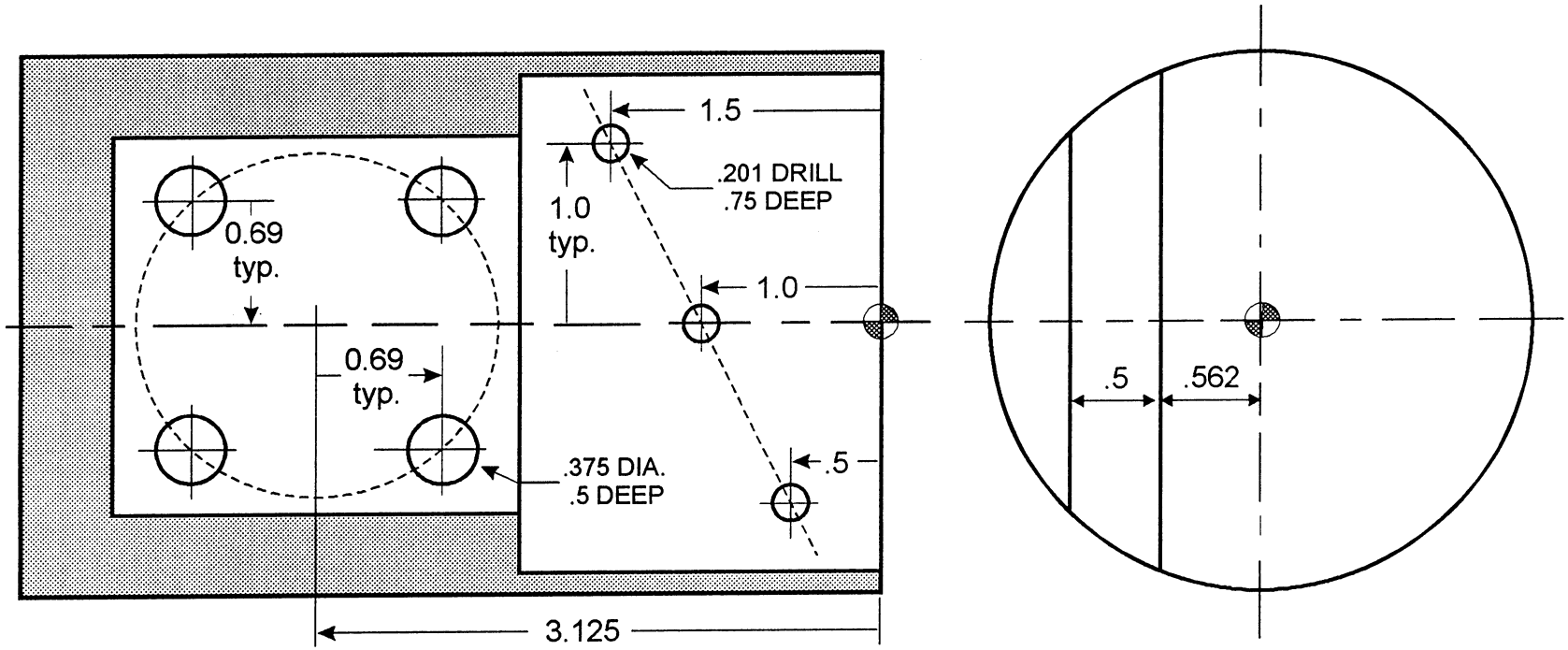

WORKPIECE SIZE
3.0“ DIA. X 6.0” LONG

MAZATROL:88 PAGE 1

UNo.	MAT.	OD-MAX	ID-MIN	LENGTH	WORK FACE	RPM
♦ 0	ALY STL	3.	0.	6.	0.	

UNo.	UNIT	MODE	POS-C	SRV-A	BTM	FIN-A
1	FCE MILL	ZY	90.	0.438	4	0.02

SNo.	TOOL		NOM-Ø		No.	APRCH-1	APRCH-2	TYPE	AFD	DEP-A	WID-R	C-SP	FR	M	M	M
R 1	FCE MILL	OUT	2.	B	3	0.4	-2.2	2BI	♦	0.209	0.9	311	0.0056	8		
F 2	FCE MILL	OUT	2.	B	3	0.4	-2.2	2BI	♦	♦	0.9	429	0.033	8		

FIG PTN	SHIFT-R	P1Z/CZ	P1Y/CY	P3Z/R	P3Y	CN1	CN2	CN3	CN4
1SQR	1.062	0.	-1.5	5.	1.5				

UNo.	UNIT	MODE	POS-C	SRV-A	BTM	WAL	FIN-A	FIN-R	INTER-R	CHMF
2	POCKET	ZY	90.	0.5	4	4	0.02	0.02	0.	0.

SNo.	TOOL		NOM-Ø		No.	APRCH-1	APRCH-2	TYPE	AFD	TYPE	PK-DEP	DEP-A	WID-R	C-SP	FR	M	M	M
R 1	END MILL	OUT	1.	B	6	0.75	-1.38	CW	G01	PECK	0.3	0.48	0.7	196	0.0049	8		
F 2	END MILL	OUT	1.	B	6	0.75	-1.38	CCW	G01		♦	♦	0.7	219	0.0151	8		

FIG PTN	SHIFT-R	P1Z/CZ	P1Y/CY	P3Z/R	P3Y	CN1	CN2	CN3	CN4
1SQR	0.562	-0.4	-1.9	1.9	1.9				

UNo.	UNIT	MODE	POS-C	DIA	DEPTH	CHMF
3	DRILLING	ZY	90.	0.201	0.75	0.02

SNo.	TOOL		NOM-Ø		No.	HOLE-Ø	HOLE-DEP	PRE-DIA	PRE-DEP	RGH	DEPTH	C-SP	FR	M	M	M
1	CTR-DR	OUT	0.5	B	9	0.241	♦	♦	♦	90°	CTR-D	164	0.004	8		
2	DRILL	OUT	0.2	B		0.2	0.75	0.	100	PCK1	T 0.2	183	0.0034	8		

FIG PTN	SPT-Z	SPT-Y	SPT-R	CZ/PZ	CY/PY	F	M	N	ANG	P	Q	R
1PT	1.5	-1.	0.562	♦	♦	♦	♦	♦	♦	0	♦	0
2PT	1.	0.	0.562	♦	♦	♦	♦	♦	♦	0	♦	0
3PT	0.5	1.	0.562	♦	♦	♦	♦	♦	♦	0	♦	0

UNo.	UNIT	MODE	POS-C	DIA	DEPTH	CHMF
4	DRILLING	ZY	90.	0.375	0.5	0.02

SNo.	TOOL		NOM-Ø		No.	HOLE-Ø	HOLE-DEP	PRE-DIA	PRE-DEP	RGH	DEPTH	C-SP	FR	M	M	M
1	CTR-DR	OUT	0.5	B	9	0.415	♦	♦	♦	90°	CTR-D	164	0.004	8		
2	DRILL	OUT	0.38	B		0.38	0.5	0.	100	DRIL	T 0.19	183	0.0066	8		

FIG PTN	SPT-Z	SPT-Y	SPT-R	CZ/PZ	CY/PY	F	M	N	ANG	P	Q	R
1ARC	2.435	-0.69	1.062	3.125	0.	♦	4	♦	90.	♦	0	1

UNo.	UNIT	CONTI.	REPEAT	SHIFT	NUMBER	RETURN ZERO PT	WORK No.	EXECTE
5	END		♦	♦				♦

MAZATROL:388 PAGE 1

UNo.	MAT.	OD-MAX	ID-MIN	LENGTH	WORK FACE	RPM
‡ 0	CBN STL	3.	0.	6.	0.	

UNo.	UNIT	MODE	POS-C	SRV-A	BTM	FIN-A
1	TOP EMIL	ZY	90.	0.438	4	0.02

SNo.	TOOL	NOM-Ø	No.	APRCH-1	APRCH-2	TYPE	AFD	DEP-A	WID-R	C-SP	FR	M	M	M
R 1	END MILL	OUT 2.	B 3	0.5	-1.1	2BI	G01	0.418	1.4	154	0.0037	8		
F 2	END MILL	OUT 2.	B 3	0.5	-1.1	2BI	G01	♦	1.4	154	0.0226	8		

FIG	PTN	SHIFT-R	P1Z/CZ	P1Y/CY	P3Z/R	P3Y	CN1	CN2	CN3	CN4
	1SQR	1.062	0.	-1.5	5.	1.5				

UNo.	UNIT	MODE	POS-C	SRV-A	SRV-R	RGH	FIN-A	START	END
2	LINE CTR	ZY	90.	0.5	1.	5	0.014	OPEN	OPEN

SNo.	TOOL	NOM-Ø	No.	APRCH-1	APRCH-2	TYPE	AFD	DEP-A	WID-R	C-SP	FR	M	M	M
R 1	END MILL	OUT 1.	B 6	0.3	-2.52	♦	G01	0.486	♦	137	0.0045	8		
F 2	END MILL	OUT 1.	B 6	0.3	-2.52	♦	G01	♦	♦	219	0.0125	8		

FIG	PTN	SHIFT-R	Z	Y	R/th	I	J	P	CNR	R-FEED	RGH
1	LINE	0.562	0.3	-1.9							
2	LINE	♦	0.3	1.9							
3	LINE	♦	1.	1.9							
4	LINE	♦	1.	-1.9							
5	LINE	♦	1.4	-1.9							
6	LINE	♦	1.4	1.9							

UNo.	UNIT	MODE	POS-C	DIA	DEPTH	CHMF
3	DRILLING	ZY	90.	0.201	0.75	0.02

SNo.	TOOL	NOM-Ø	No.	HOLE-Ø	HOLE-DEP	PRE-DIA	PRE-DEP	RGH	DEPTH	C-SP	FR	M	M	M
1	CTR-DR	OUT 0.5	B 9	0.241	♦	♦	♦	90°	CTR-D	164	0.004	8		
2	DRILL	OUT 0.2	B	0.2	0.75	0.	100	PCK1	T 0.2	183	0.0034	8		

FIG	PTN	SPT-Z	SPT-Y	SPT-R	CZ/PZ	CY/PY	F	M	N	ANG	P	Q	R
	1PT	1.5	-1.	0.562	♦	♦	♦	♦	♦	♦	0	♦	0
	2PT	1.	0.	0.562	♦	♦	♦	♦	♦	♦	0	♦	0
	3PT	0.5	1.	0.562	♦	♦	♦	♦	♦	♦	0	♦	0

UNo.	UNIT	MODE	POS-C	DIA	DEPTH	CHMF
4	DRILLING	ZY	90.	0.375	0.5	0.02

SNo.	TOOL	NOM-Ø	No.	HOLE-Ø	HOLE-DEP	PRE-DIA	PRE-DEP	RGH	DEPTH	C-SP	FR	M	M	M
1	CTR-DR	OUT 0.5	B 9	0.415	♦	♦	♦	90°	CTR-D	164	0.004	8		
2	DRILL	OUT 0.38	B	0.38	0.5	0.	100	DRIL	T 0.19	183	0.0066	8		

FIG	PTN	SPT-Z	SPT-Y	SPT-R	CZ/PZ	CY/PY	F	M	N	ANG	P	Q	R
	1ARC	2.435	-0.69	1.062	3.125	0.	♦	4	♦	90.	♦	0	1

UNo.	UNIT	CONTI.	REPEAT	SHIFT	NUMBER	RETURN	WORK No.	EXECTE
5	END		♦	♦		ZERO PT		♦

```
UNo.   MAT.   OD-MAX   ID-MIN    LENGTH  WORK FACE            RPM
♦  0 CBN STL     3.       0.       6.

UNo. UNIT     MODE            POS-C    SRV-A    SRV-R    RGH   FIN-A     FIN-R    START  END    INTER-R   CHMF
   1 LINE LFT ZY              90.       0.438    2.       4    0.02      0.02     OPEN   OPEN    0.       0.
SNo.  TOOL           NOM-Ø   No.    APRCH-1    APRCH-2    TYPE  AFD      DEP-A     WID-R    C-SP   FR      M   M   M
R  1 END MILL OUT     2.   B  3       0.68      -3.12      ♦    G01       0.418     ♦        154  0.0026    8
F  2 END MILL OUT     2.   B  3       0.7       -3.12      ♦    G01        ♦        ♦        219  0.0226    8
FIG  PTN      SHIFT-R       Z          Y          R/th       I          J       P       CNR     R-FEED  RGH
   1 LINE       1.062      1.7       -2.
   2 LINE        ♦         1.7        2.

UNo. UNIT     MODE            POS-C    SRV-A    SRV-R    RGH   FIN-A     FIN-R    START  END    INTER-R   CHMF
   2 LINE LFT ZY              90.       0.438    2.       4    0.02      0.02     OPEN   OPEN    0.       0.
SNo.  TOOL           NOM-Ø   No.    APRCH-1    APRCH-2    TYPE  AFD      DEP-A     WID-R    C-SP   FR      M   M   M
R  1 END MILL OUT     2.   B  3       2.38      -3.12      ♦    G01       0.418     ♦        154  0.0026    8
F  2 END MILL OUT     2.   B  3       2.4       -3.12      ♦    G01        ♦        ♦        219  0.0226    8
FIG  PTN      SHIFT-R       Z          Y          R/th       I          J       P       CNR     R-FEED  RGH
   1 LINE       1.062      3.4       -2.
   2 LINE        ♦         3.4        2.

UNo. UNIT     MODE            POS-C    SRV-A    SRV-R    RGH   FIN-A     FIN-R    START  END    INTER-R   CHMF
   3 LINE LFT ZY              90.       0.438    2.       4    0.02      0.02     OPEN   OPEN    0.       0.
SNo.  TOOL           NOM-Ø   No.    APRCH-1    APRCH-2    TYPE  AFD      DEP-A     WID-R    C-SP   FR      M   M   M
R  1 END MILL OUT     2.   B  3       3.98      -3.12      ♦    G01       0.418     ♦        154  0.0026    8
F  2 END MILL OUT     2.   B  3       4.        -3.12      ♦    G01        ♦        ♦        219  0.0226    8
FIG  PTN      SHIFT-R       Z          Y          R/th       I          J       P       CNR     R-FEED  RGH
   1 LINE       1.062      5.        -2.
   2 LINE        ♦         5.         2.

UNo. UNIT     MODE            POS-C    SRV-A    SRV-R    RGH   FIN-A     FIN-R    START  END    INTER-R   CHMF
   4 LINE RGT ZY              90.       0.5      1.       4    0.02      0.02     OPEN   OPEN    0.       0.
SNo.  TOOL           NOM-Ø   No.    APRCH-1    APRCH-2    TYPE  AFD      DEP-A     WID-R    C-SP   FR      M   M   M
R  1 END MILL OUT     1.   B  6       0.08       2.62      ♦    G01       0.48      ♦        137  0.0047    8
F  2 END MILL OUT     1.   B  6       0.1        2.62      ♦    G01        ♦        ♦        219  0.0151    8
FIG  PTN      SHIFT-R       Z          Y          R/th       I          J       P       CNR     R-FEED  RGH
   1 LINE       0.562      0.6        2.
   2 LINE        ♦         0.6       -2.

UNo. UNIT     MODE            POS-C    SRV-A    SRV-R    RGH   FIN-A     FIN-R    START  END    INTER-R   CHMF
   5 LINE RGT ZY              90.       0.5      1.       4    0.02      0.02     OPEN   OPEN    0.       0.
SNo.  TOOL           NOM-Ø   No.    APRCH-1    APRCH-2    TYPE  AFD      DEP-A     WID-R    C-SP   FR      M   M   M
R  1 END MILL OUT     1.   B  6       0.68       2.62      ♦    G01       0.48      ♦        137  0.0047    8
F  2 END MILL OUT     1.   B  6       0.7        2.62      ♦    G01        ♦        ♦        219  0.0151    8
FIG  PTN      SHIFT-R       Z          Y          R/th       I          J       P       CNR     R-FEED  RGH
   1 LINE       0.562      1.2        2.
   2 LINE        ♦         1.2       -2.

UNo. UNIT     MODE            POS-C    SRV-A    SRV-R    RGH   FIN-A     FIN-R    START  END    INTER-R   CHMF
   6 LINE RGT ZY              90.       0.5      1.       4    0.02      0.02     OPEN   OPEN    0.       0.
SNo.  TOOL           NOM-Ø   No.    APRCH-1    APRCH-2    TYPE  AFD      DEP-A     WID-R    C-SP   FR      M   M   M
R  1 END MILL OUT     1.   B  6       1.38       2.62      ♦    G01       0.48      ♦        137  0.0047    8
F  2 END MILL OUT     1.   B  6       1.4        2.62      ♦    G01        ♦        ♦        219  0.0151    8
FIG  PTN      SHIFT-R       Z          Y          R/th       I          J       P       CNR     R-FEED  RGH
   1 LINE       0.562      1.9        2.
   2 LINE        ♦         1.9       -2.

UNo. UNIT     MODE            POS-C     DIA      DEPTH    CHMF
   7 DRILLING ZY              90.       0.201    0.75     0.02
SNo.  TOOL           NOM-Ø   No.    HOLE-Ø   HOLE-DEP   PRE-DIA    PRE-DEP  RGH   DEPTH     C-SP   FR      M   M   M
   1 CTR-DR   OUT     0.5  B  9      0.241      ♦          ♦          ♦       90°   CTR-D     164  0.004     8
   2 DRILL    OUT     0.2  B         0.2        0.75       0.       100       PCK1  T 0.2     183  0.0034    8
FIG PTN   SPT-Z      SPT-Y      SPT-R       CZ/PZ      CY/PY     F  M  N  ANG     P Q R
   1PT      1.5       -1.        0.562       ♦          ♦        ♦  ♦  ♦  ♦      0 ♦ 0
   2PT      1.         0.        0.562       ♦          ♦        ♦  ♦  ♦  ♦      0 ♦ 0
   3PT      0.5        1.        0.562       ♦          ♦        ♦  ♦  ♦  ♦      0 ♦ 0

UNo. UNIT     MODE            POS-C     DIA      DEPTH    CHMF
   8 DRILLING ZY              90.       0.375    0.5      0.02
SNo.  TOOL           NOM-Ø   No.    HOLE-Ø   HOLE-DEP   PRE-DIA    PRE-DEP  RGH   DEPTH     C-SP   FR      M   M   M
   1 CTR-DR   OUT     0.5  B  9      0.415      ♦          ♦          ♦       90°   CTR-D     164  0.004     8
   2 DRILL    OUT     0.38 B         0.38       0.5        0.       100       DRIL  T 0.19    183  0.0066    8
FIG PTN   SPT-Z      SPT-Y      SPT-R       CZ/PZ      CY/PY     F  M  N  ANG     P Q R
   1ARC     2.435     -0.69      1.062       3.125      0.        ♦  4  ♦  90.    ♦ 0 1

UNo. UNIT   CONTI. REPEAT SHIFT    NUMBER         RETURN              WORK No.                        EXECTE
   9 END              ♦     ♦                     ZERO PT                                              ♦
```

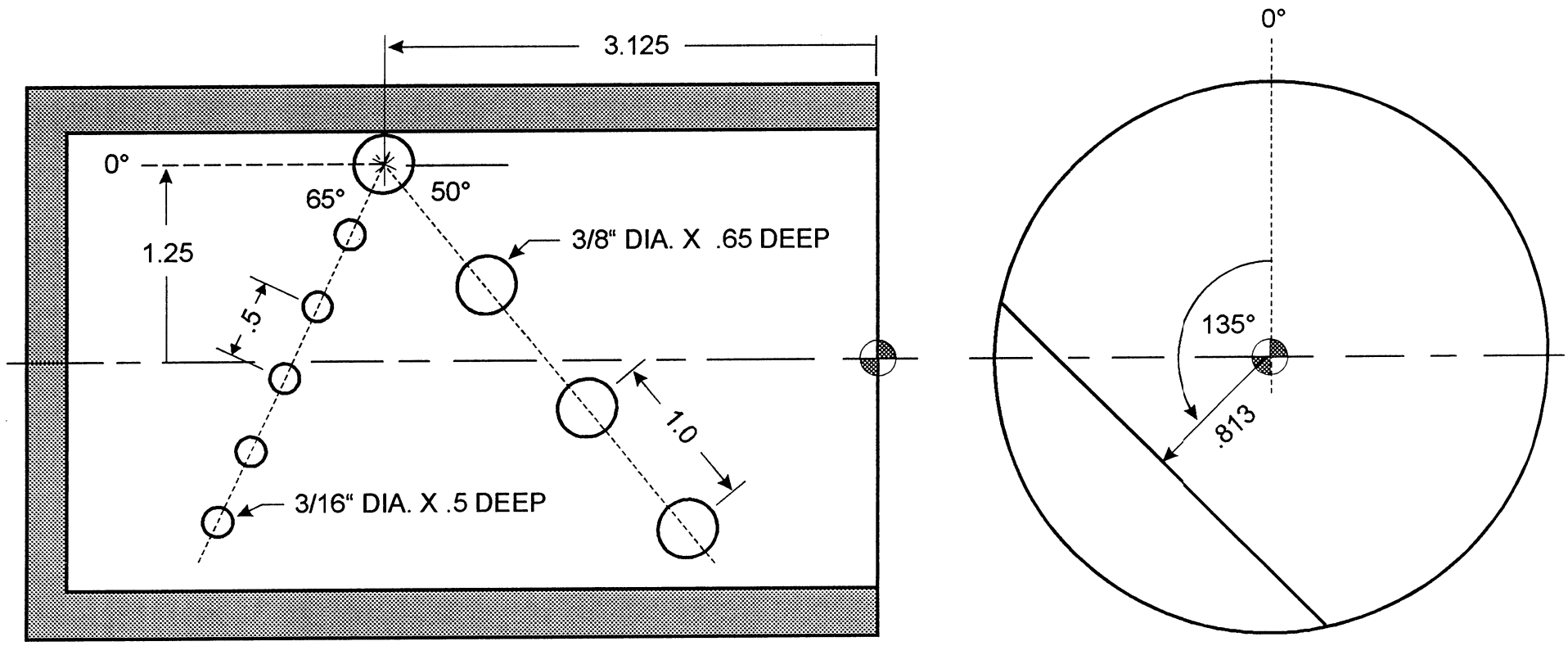

WORKPIECE SIZE
3.5" DIA. X 6.0" LONG

```
UNo.   MAT.   OD-MAX   ID-MIN    LENGTH  WORK FACE            RPM
  0 CBN STL     3.5      0.       6.

UNo. UNIT     MODE            POS-C    SRV-A    SRV-R    RGH   FIN-A     FIN-R    START  END    INTER-R   CHMF
   1 LINE LFT ZY             135.       0.937    2.       4    0.02      0.02     OPEN   OPEN    0.       0.
SNo.  TOOL           NOM-Ø   No.    APRCH-1    APRCH-2    TYPE  AFD      DEP-A     WID-R    C-SP   FR      M   M   M
R  1 END MILL OUT     2.   B  3       0.68      -3.12      ♦    G01       0.418     ♦        154  0.0026    8
F  2 END MILL OUT     2.   B  6       0.7       -3.12      ♦    G01        ♦        ♦        219  0.0226    8
FIG  PTN      SHIFT-R       Z          Y          R/th       I          J       P       CNR     R-FEED  RGH
   1 LINE       0.813      1.7       -2.
   2 LINE        ♦         1.7        2.

UNo. UNIT     MODE            POS-C    SRV-A    SRV-R    RGH   FIN-A     FIN-R    START  END    INTER-R   CHMF
   2 LINE LFT ZY             135.       0.937    2.       4    0.02      0.02     OPEN   OPEN    0.       0.
SNo.  TOOL           NOM-Ø   No.    APRCH-1    APRCH-2    TYPE  AFD      DEP-A     WID-R    C-SP   FR      M   M   M
R  1 END MILL OUT     2.   B  3       2.38      -3.12      ♦    G01       0.418     ♦        154  0.0026    8
F  2 END MILL OUT     2.   B  6       2.4       -3.12      ♦    G01        ♦        ♦        219  0.0226    8
FIG  PTN      SHIFT-R       Z          Y          R/th       I          J       P       CNR     R-FEED  RGH
   1 LINE       0.813      3.4       -2.
   2 LINE        ♦         3.4        2.

UNo. UNIT     MODE            POS-C    SRV-A    SRV-R    RGH   FIN-A     FIN-R    START  END    INTER-R   CHMF
   3 LINE LFT ZY             135.       0.937    2.       4    0.02      0.02     OPEN   OPEN    0.       0.
SNo.  TOOL           NOM-Ø   No.    APRCH-1    APRCH-2    TYPE  AFD      DEP-A     WID-R    C-SP   FR      M   M   M
R  1 END MILL OUT     2.   B  3       3.98      -3.12      ♦    G01       0.418     ♦        154  0.0026    8
F  2 END MILL OUT     2.   B  6       4.        -3.12      ♦    G01        ♦        ♦        219  0.0226    8
FIG  PTN      SHIFT-R       Z          Y          R/th       I          J       P       CNR     R-FEED  RGH
   1 LINE       0.813      5.        -2.
   2 LINE        ♦         5.         2.

UNo. UNIT     MODE            POS-C     DIA      DEPTH    CHMF
   4 DRILLING ZY             135.       0.375    0.65     0.02
SNo.  TOOL           NOM-Ø   No.    HOLE-Ø   HOLE-DEP   PRE-DIA    PRE-DEP  RGH   DEPTH     C-SP   FR      M   M   M
   1 CTR-DR   OUT     0.5  B  9      0.415      ♦         ♦         ♦        90°   CTR-D     164  0.004     8
   2 DRILL    OUT     0.38 B         0.38      0.65      0.       100       PCK1  T 0.2     183  0.0034    8
FIG PTN   SPT-Z      SPT-Y      SPT-R       CZ/PZ      CY/PY     F  M  N  ANG     P Q R
   1LIN     3.125     -1.25       0.813      1.          ♦        ♦  4  ♦ 130.     ♦ 0 1

UNo. UNIT     MODE            POS-C     DIA      DEPTH    CHMF
   5 DRILLING ZY             135.       0.1875   0.5      0.02
SNo.  TOOL           NOM-Ø   No.    HOLE-Ø   HOLE-DEP   PRE-DIA    PRE-DEP  RGH   DEPTH     C-SP   FR      M   M   M
   1 CTR-DR   OUT     0.5  B  9      0.2275     ♦         ♦         ♦        90°   CTR-D     164  0.004     8
   2 DRILL    OUT     0.19 B         0.19      0.5       0.       100       DRIL  T 0.19     183  0.0066    8
FIG PTN   SPT-Z      SPT-Y      SPT-R       CZ/PZ      CY/PY     F  M  N  ANG     P Q R
   1LIN     3.125     -1.25       0.813      0.5         ♦        ♦  6  ♦  65.     ♦ 1 0

UNo. UNIT   CONTI. REPEAT SHIFT    NUMBER         RETURN              WORK No.                          EXECTE
   6 END              ♦     ♦                     ZERO PT                                                  ♦
```

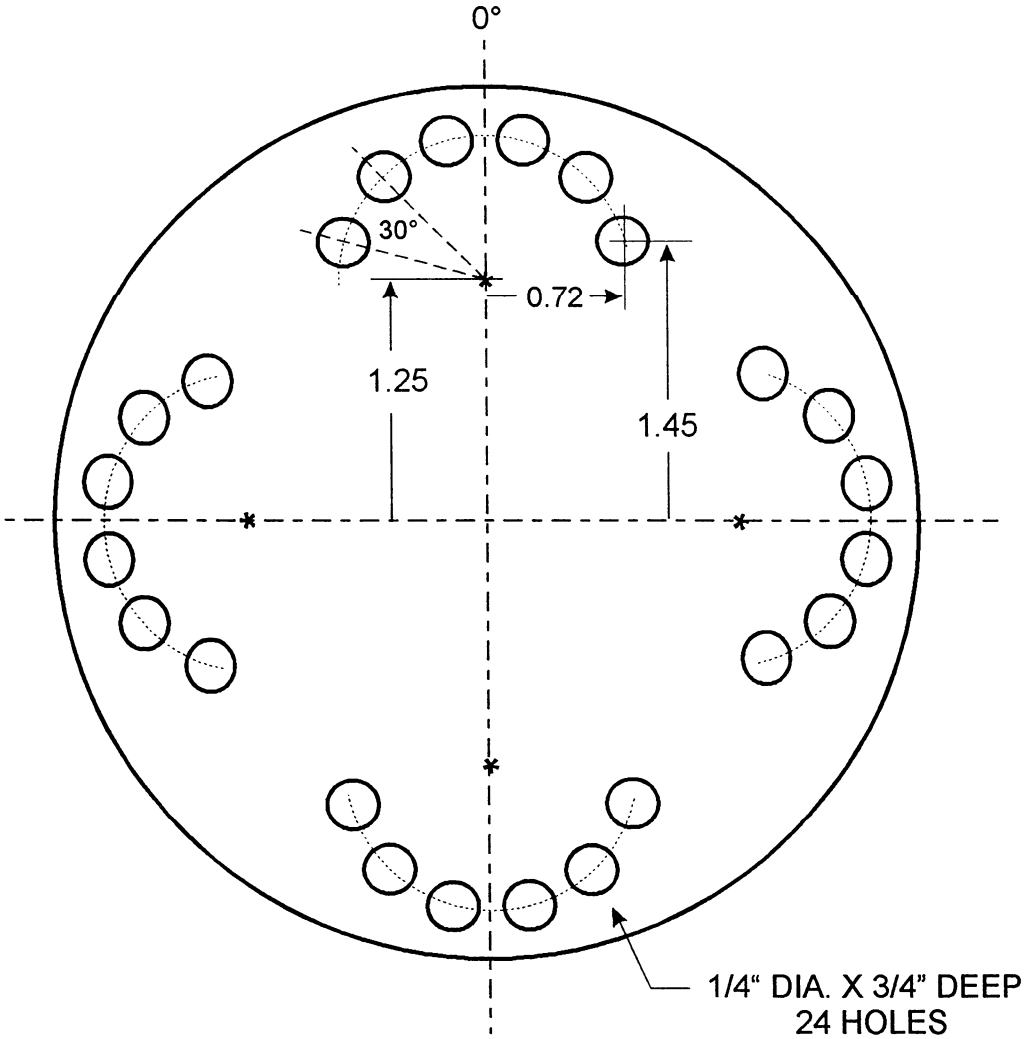

WORKPIECE SHAPE
4½" DIA. X 3" LONG

MAZATROL:92 PAGE 1

UNo.	MAT.	OD-MAX	ID-MIN	LENGTH	WORK FACE	RPM
0	ALY STL	4.5	0.	3.	0.	

UNo.	UNIT	MODE	POS-C	DIA	DEPTH	CHMF
1	DRILLING	XY	0.	0.25	0.75	0.02

SNo.	TOOL		NOM-Ø		No.	HOLE-Ø	HOLE-DEP	PRE-DIA	PRE-DEP	RGH	DEPTH	C-SP	FR	M	M	M
1	CTR-DR	EDGE	0.5	A	3	0.29	♦	♦	♦	90°	CTR-D	164	0.004	8		
2	DRILL	EDGE	0.25	A		0.25	0.75	0.	100	DRIL	T 0.125	183	0.0046	8		

FIG PTN	SPT-R/x	SPT-C/y	SPT-Z	CX/PX	CY/PY	F	M	N	ANG	P	Q	R
1ARC	1.45	-0.72	0.	1.25	0.	♦	6	♦	30.	♦	0	0

UNo.	UNIT	MODE	POS-C	DIA	DEPTH	CHMF
2	DRILLING	XY	90.	0.25	0.75	0.02

SNo.	TOOL		NOM-Ø		No.	HOLE-Ø	HOLE-DEP	PRE-DIA	PRE-DEP	RGH	DEPTH	C-SP	FR	M	M	M
1	CTR-DR	EDGE	0.5	A	3	0.29	♦	♦	♦	90°	CTR-D	164	0.004	8		
2	DRILL	EDGE	0.25	A		0.25	0.75	0.	100	DRIL	T 0.125	183	0.0046	8		

FIG PTN	SPT-R/x	SPT-C/y	SPT-Z	CX/PX	CY/PY	F	M	N	ANG	P	Q	R
1ARC	1.45	-0.72	0.	1.25	0.	♦	6	♦	30.	♦	0	0

UNo.	UNIT	MODE	POS-C	DIA	DEPTH	CHMF
3	DRILLING	XY	180.	0.25	0.75	0.02

SNo.	TOOL		NOM-Ø		No.	HOLE-Ø	HOLE-DEP	PRE-DIA	PRE-DEP	RGH	DEPTH	C-SP	FR	M	M	M
1	CTR-DR	EDGE	0.5	A	3	0.29	♦	♦	♦	90°	CTR-D	164	0.004	8		
2	DRILL	EDGE	0.25	A		0.25	0.75	0.	100	DRIL	T 0.125	183	0.0046	8		

FIG PTN	SPT-R/x	SPT-C/y	SPT-Z	CX/PX	CY/PY	F	M	N	ANG	P	Q	R
1ARC	1.45	-0.72	0.	1.25	0.	♦	6	♦	30.	♦	0	0

UNo.	UNIT	MODE	POS-C	DIA	DEPTH	CHMF
4	DRILLING	XY	270.	0.25	0.75	0.02

SNo.	TOOL		NOM-Ø		No.	HOLE-Ø	HOLE-DEP	PRE-DIA	PRE-DEP	RGH	DEPTH	C-SP	FR	M	M	M
1	CTR-DR	EDGE	0.5	A	3	0.29	♦	♦	♦	90°	CTR-D	164	0.004	8		
2	DRILL	EDGE	0.25	A		0.25	0.75	0.	100	DRIL	T 0.125	183	0.0046	8		

FIG PTN	SPT-R/x	SPT-C/y	SPT-Z	CX/PX	CY/PY	F	M	N	ANG	P	Q	R
1ARC	1.45	-0.72	0.	1.25	0.	♦	6	♦	30.	♦	0	0

UNo.	UNIT	CONTI.	REPEAT	SHIFT	NUMBER	RETURN	WORK No.	EXECTE
5	END		♦	♦		ZERO PT		♦

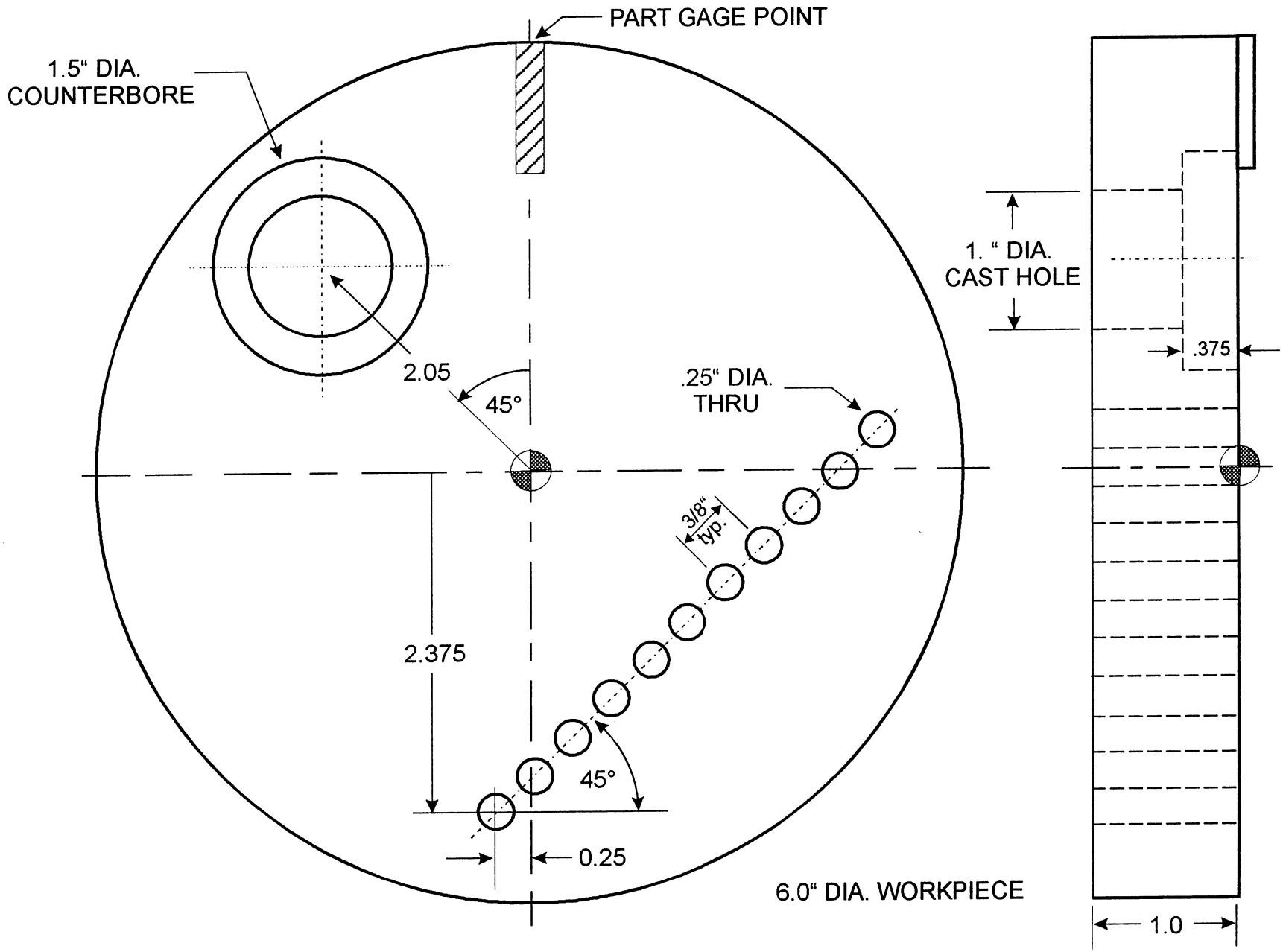
PART GAGE POINT
1.5" DIA.
COUNTERBORE
2.05
45°
.25" DIA.
THRU
3/8"
typ.
2.375
45°
0.25
6.0" DIA. WORKPIECE
1. " DIA.
CAST HOLE
.375
1.0

MAZATROL:94 PAGE 1

UNo.	MAT.	OD-MAX	ID-MIN	LENGTH	WORK FACE	RPM
0	CBN STL	6.	0.	1.	0.	

UNo.	UNIT	MODE	POS-C	TORNAD	DIA	DEPTH	CHMF	BTM	PRE-DIA	CHMF	PITCH1	PITCH2
1	CIRC MIL	XY	0.	0	1.5	0.375	0.	4	1.	0.	♦	♦

SNo.	TOOL	NOM-Ø	No.	HOLE-Ø	HOLE-DEP	PRE-DIA	PRE-DEP	RGH	DEPTH	C-SP	FR	M	M	M
1	END MILL EDGE	0.25	A	1.5	0.375	1.	CCW	4	T 0.15	124	0.0014	8		

FIG PTN	SPT-R/x	SPT-C/y	SPT-Z	CX/PX	CY/PY	F	M	N	ANG	P	Q	R
1PT	2.05	45.	0.	♦	♦	♦	♦	♦	♦	0	♦	1

UNo.	UNIT	MODE	POS-C	DIA	DEPTH	CHMF
2	DRILLING	XY	180.	0.25	1.	0.02

SNo.	TOOL	NOM-Ø	No.	HOLE-Ø	HOLE-DEP	PRE-DIA	PRE-DEP	RGH	DEPTH	C-SP	FR	M	M	M
1	CTR-DR	EDGE 0.5	A	0.29	♦	♦	♦	90°	CTR-D	206	0.004	8		
2	DRILL	EDGE 0.25	A	0.25	1.	0.	100	PCK1	T 0.125	196	0.0047	8		

FIG PTN	SPT-R/x	SPT-C/y	SPT-Z	CX/PX	CY/PY	F	M	N	ANG	P	Q	R
1LIN	-2.375	0.25	0.	0.375	♦	♦	11	♦	-45.	♦	0	1

UNo.	UNIT	CONTI.	REPEAT	SHIFT	NUMBER	RETURN ZERO PT	WORK No.	EXECTE
3	END		♦	♦				♦

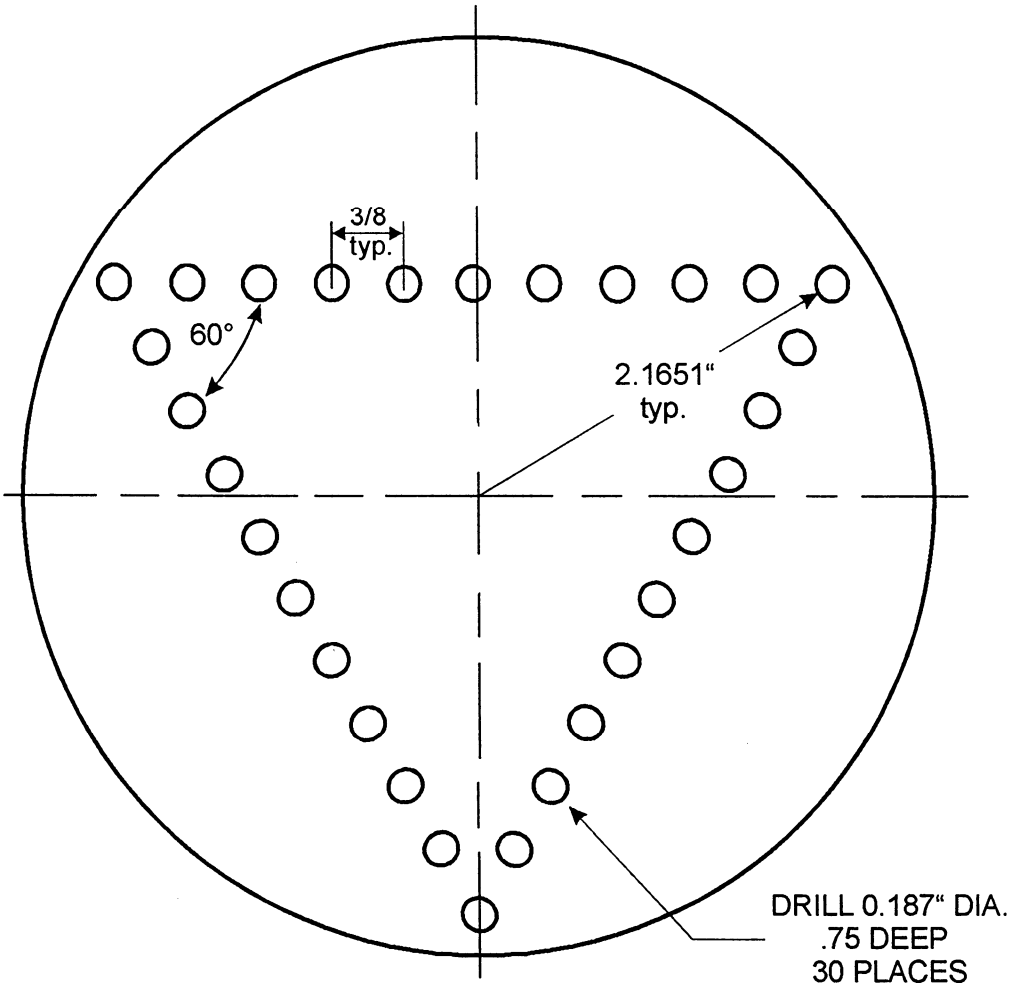

WORKPIECE SIZE
4.75" DIA, X 4." LONG

```
MAZATROL:96 PAGE 1

UNo.   MAT.   OD-MAX   ID-MIN    LENGTH  WORK FACE            RPM
‡  0 CBN STL     4.75     0.       4.       0.

UNo. UNIT     MODE            POS-C     DIA      DEPTH    CHMF
   1 DRILLING XY               0.       0.1875   0.75     0.02
SNo.  TOOL           NOM-Ø   No.    HOLE-Ø   HOLE-DEP   PRE-DIA    PRE-DEP  RGH   DEPTH     C-SP   FR      M   M   M
   1 CTR-DR   EDGE    0.5  A  3      0.2275     ♦         ♦         ♦        90°   CTR-D     206  0.004    8
   2 DRILL    EDGE    0.19 A         0.19      0.75      0.       100       PCK1  T 0.1     177  0.0038   8
FIG PTN   SPT-R/x   SPT-C/y     SPT-Z       CX/PX      CY/PY     F  M  N  ANG     P Q R
   1LIN     2.1651    -60.        0.         0.375       ♦       ♦ 11 ♦  90.     ♦ 0 0

UNo. UNIT     MODE            POS-C     DIA      DEPTH    CHMF
   2 DRILLING XY             120.       0.1875   0.75     0.02
SNo.  TOOL           NOM-Ø   No.    HOLE-Ø   HOLE-DEP   PRE-DIA    PRE-DEP  RGH   DEPTH     C-SP   FR      M   M   M
   1 CTR-DR   EDGE    0.5  A  3      0.2275     ♦         ♦         ♦        90°   CTR-D     206  0.004    8
   2 DRILL    EDGE    0.19 A         0.19      0.75      0.       100       PCK1  T 0.1     177  0.0038   8
FIG PTN   SPT-R/x   SPT-C/y     SPT-Z       CX/PX      CY/PY     F  M  N  ANG     P Q R
   1LIN     2.1651    -60.        0.         0.375       ♦       ♦ 11 ♦  90.     ♦ 1 0

UNo. UNIT     MODE            POS-C     DIA      DEPTH    CHMF
   3 DRILLING XY             240.       0.1875   0.75     0.02
SNo.  TOOL           NOM-Ø   No.    HOLE-Ø   HOLE-DEP   PRE-DIA    PRE-DEP  RGH   DEPTH     C-SP   FR      M   M   M
   1 CTR-DR   EDGE    0.5  A  3      0.2275     ♦         ♦         ♦        90°   CTR-D     206  0.004    8
   2 DRILL    EDGE    0.19 A         0.19      0.75      0.       100       PCK1  T 0.1     177  0.0038   8
FIG PTN   SPT-R/x   SPT-C/y     SPT-Z       CX/PX      CY/PY     F  M  N  ANG     P Q R
   1LIN     2.1651    -60.        0.         0.375       ♦       ♦ 10 ♦  90.     ♦ 1 0

UNo. UNIT   CONTI. REPEAT SHIFT    NUMBER         RETURN              WORK No.                        EXECTE
   4 END              ♦     ♦                     ZERO PT                                                  ♦
```

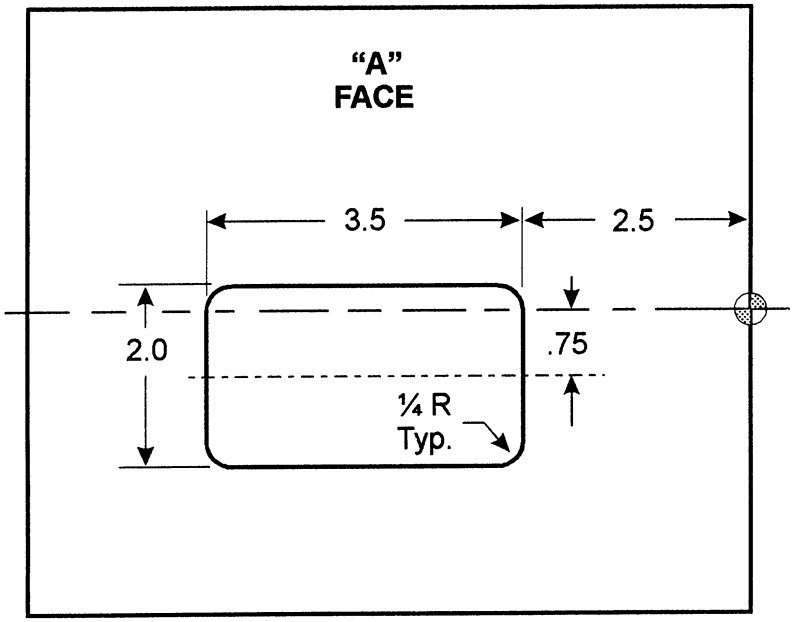

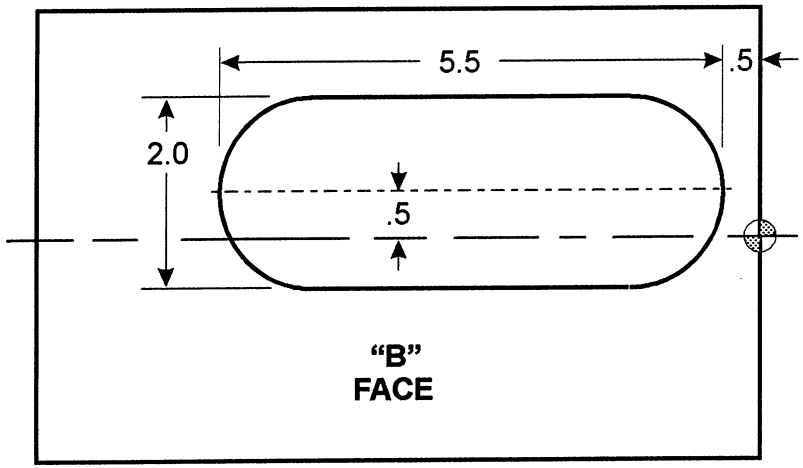

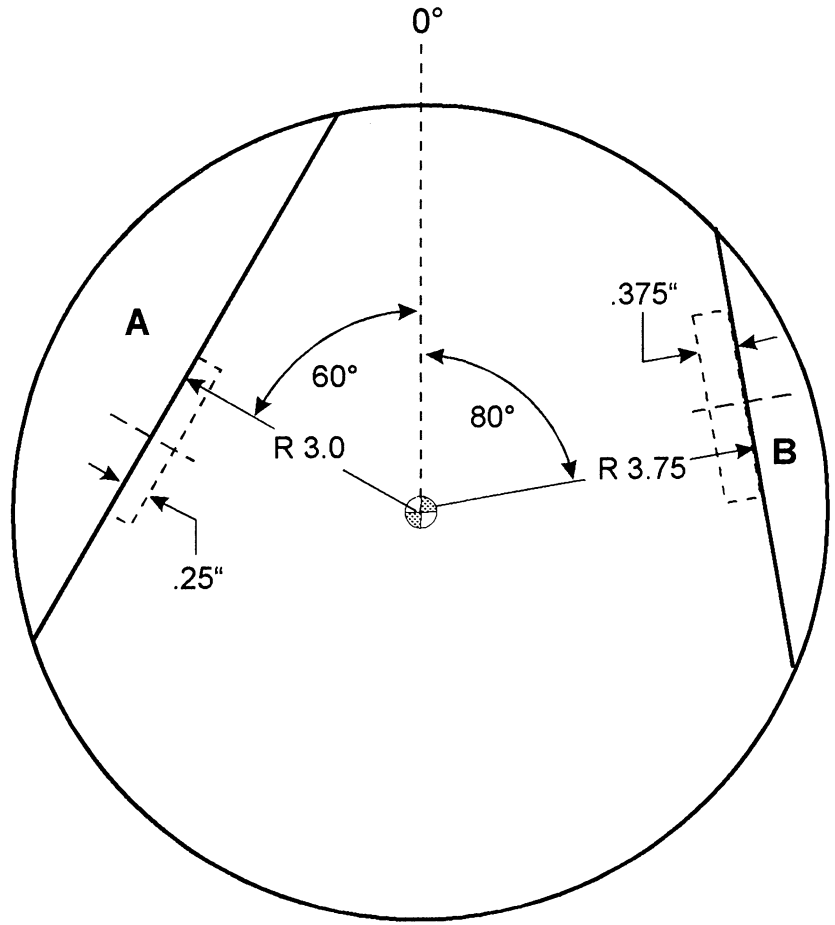

WORKPIECE SIZE: 9." DIA. X 10." LONG

```
MAZATROL:98 PAGE 1

UNo.   MAT.   OD-MAX   ID-MIN    LENGTH  WORK FACE             RPM
‡  0 CBN STL     9.       0.      10.

UNo. UNIT     MODE            POS-C    SRV-A             BTM     FIN-A
   1 FCE MILL ZY              60.       1.5               4       0.02
SNo.  TOOL           NOM-Ø   No.    APRCH-1    APRCH-2    TYPE  AFD              DEP-A    WID-R   C-SP  FR     M   M   M
R  1 FCE MILL OUT     2.   B         -1.2       -4.1      1BI    ♦                0.296   1.4      311 0.0053   8
F  2 FCE MILL OUT     2.   B         -1.2       -4.1      1BI    ♦                  ♦      1.4      547 0.033    8
FIG PTN       SHIFT-R     P1Z/CZ     P1Y/CY     P3Z/R       P3Y        CN1       CN2       CN3       CN4
   1SQR         3.         0.        -4.5        8.5        4.5

UNo. UNIT     MODE            POS-C    SRV-A             BTM     FIN-A
   2 FCE MILL ZY             -80.       0.75              4       0.02
SNo.  TOOL           NOM-Ø   No.    APRCH-1    APRCH-2    TYPE  AFD              DEP-A    WID-R   C-SP  FR     M   M   M
R  1 FCE MILL OUT     2.   B         -1.2       -4.1      1BI    ♦                0.296   1.4      311 0.0053   8
F  2 FCE MILL OUT     2.   B         -1.2       -4.1      1BI    ♦                  ♦      1.4      547 0.033    8
FIG PTN       SHIFT-R     P1Z/CZ     P1Y/CY     P3Z/R       P3Y        CN1       CN2       CN3       CN4
   1SQR         3.75       0.        -4.5        8.5        4.5

UNo. UNIT     MODE            POS-C    SRV-A             BTM WAL FIN-A     FIN-R     INTER-R   CHMF
   3 POCKET   ZY              60.       0.25              4   4   0.02      0.02      2.        0.02
SNo.  TOOL           NOM-Ø   No.    APRCH-1    APRCH-2    TYPE  AFD TYPE PK-DEP  DEP-A    WID-R   C-SP  FR     M   M   M
R  1 END MILL OUT     0.37 B          4.25      -0.0425   CW    G01        ♦      0.23    0.259    124 0.0022   8
F  2 END MILL OUT     0.37 B          4.25      -0.0425   CCW   G01        ♦       ♦      0.259    154 0.0075   8
   3 CHAMFER  OUT     1.   C          4.17       0.04     CCW   G01  ♦     ♦       ♦       ♦       984 0.016    8
FIG PTN       SHIFT-R     P1Z/CZ     P1Y/CY     P3Z/R       P3Y        CN1       CN2       CN3       CN4
   1SQR         2.75       2.5       -0.25       6.         1.75    R  0.25   R  0.25   R  0.25   R  0.25

UNo. UNIT     MODE            POS-C    SRV-A   SLOT-WID  BTM WAL FIN-A     FIN-R     PAT.
   4 SLOT     ZY             -80.       0.375   2.        5   5   0.014     0.014     0
SNo.  TOOL           NOM-Ø   No.    APRCH-1    APRCH-2    TYPE  AFD TYPE PK-DEP  DEP-A    WID-R   C-SP  FR     M   M   M
R  1 END MILL OUT     1.   B          1.5       -0.5      CW    G01        ♦      0.361    ♦       137 0.0061   8
F  2 END MILL OUT     1.   B          1.5       -0.5      CCW   G01        ♦       ♦       ♦       154 0.0125   8
FIG  PTN      SHIFT-R       Z          Y          R/th       I          J       P       CNR     R-FEED  RGH
   1 LINE       3.375      1.5       -0.5
   2 LINE        ♦         5.        -0.5

UNo. UNIT   CONTI. REPEAT SHIFT    NUMBER         RETURN               WORK No.                          EXECTE
   5 END              ♦     ♦                     ZERO PT                                                   ♦
```

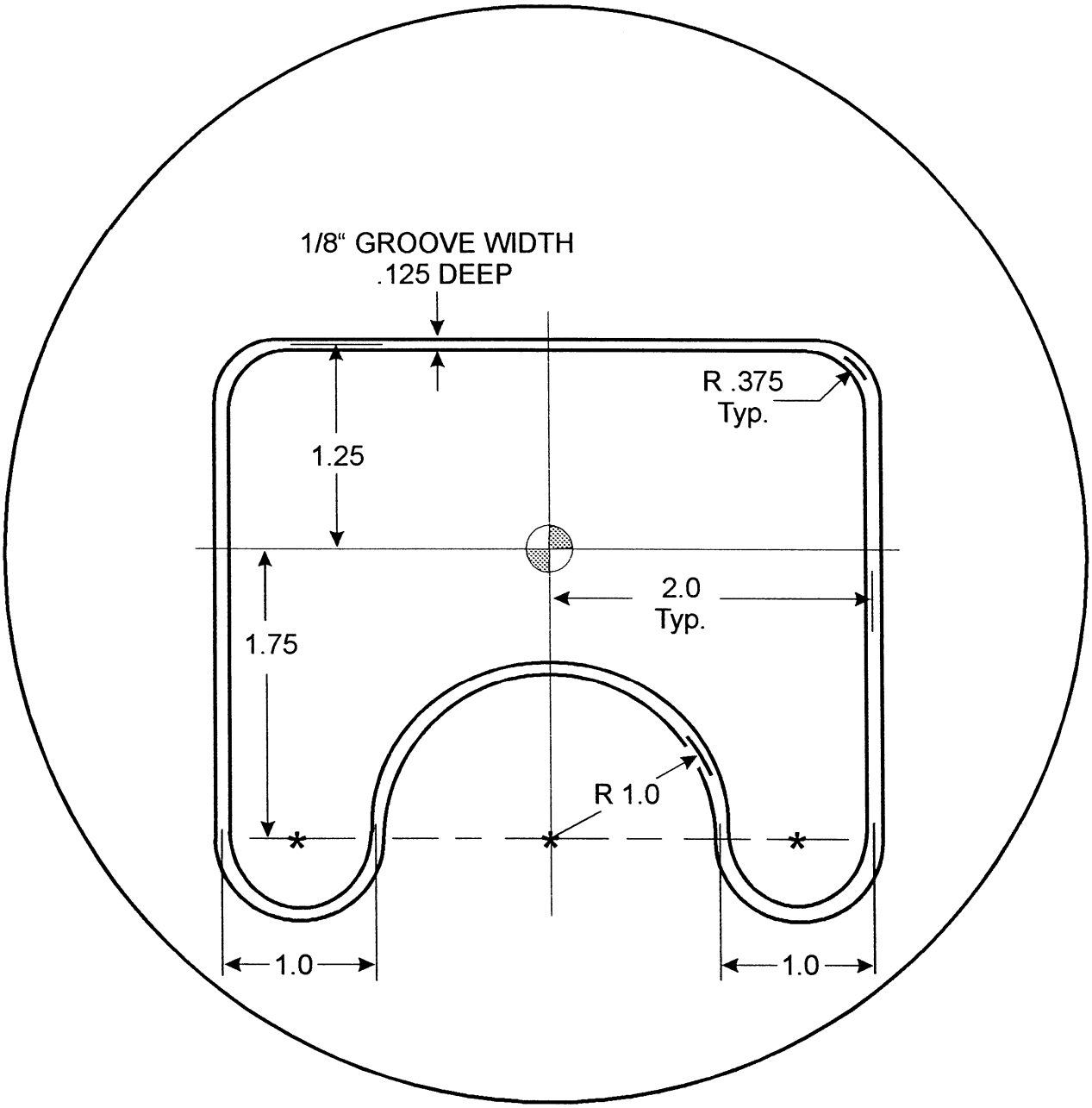

WORKPIECE SIZE: 6.5" DIA. X 1.5" LENGTH

100

MAZATROL:100 PAGE 1

UNo.	MAT.	OD-MAX	ID-MIN	LENGTH	WORK FACE	RPM
0	CBN STL	6.5	0.	1.5	0.	

UNo.	UNIT	MODE	POS-C	SRV-A	SLOT-WID	BTM	WAL	FIN-A	FIN-R	PAT.
1	SLOT	XY	0.	0.125	0.125	3	3	0.	0.	1

SNo.	TOOL	NOM-Ø	No.	APRCH-1	APRCH-2	TYPE	AFD	TYPE	PK-DEP	DEP-A	WID-R	C-SP	FR	M	M	M
R 1	END MILL	EDGE	0.12	A	0.	2.	CW	G01	PECK	0.05	0.125	♦	108	0.0003	8	

FIG	PTN	SHIFT-Z	R/x	C/y	R/th	I	J	P	CNR	R-FEED	RGH
1	LINE	0.125	0.	2.							
2	LINE	♦	1.25	2.				R	0.375		
3	LINE	♦	1.25	-2.				R	0.375		
4	LINE	♦	0.	-2.							

UNo.	UNIT	MODE	POS-C	SRV-A	SLOT-WID	BTM	WAL	FIN-A	FIN-R	PAT.
2	SLOT	XY	180.	0.125	0.125	3	3	0.	0.	1

SNo.	TOOL	NOM-Ø	No.	APRCH-1	APRCH-2	TYPE	AFD	TYPE	PK-DEP	DEP-A	WID-R	C-SP	FR	M	M	M
R 1	END MILL	EDGE	0.12	A	0.	2.	CW	G01	PECK	0.05	0.125	♦	108	0.0003	8	

FIG	PTN	SHIFT-Z	R/x	C/y	R/th	I	J	P	CNR	R-FEED	RGH
1	LINE	0.125	0.	2.							
2	LINE	♦	-1.75	2.							
3	CCW	♦	-1.75	1.	0.5						
4	CW	♦	-1.75	-1.	1.						
5	CW	♦	-1.75	-2.	0.5						
6	LINE	♦	0.	-2.							

UNo.	UNIT	CONTI.	REPEAT	SHIFT	NUMBER	RETURN	WORK No.	EXECTE
3	END		♦	♦		ZERO PT		♦

```
MAZATROL:1100 PAGE 1

UNo.   MAT.   OD-MAX   ID-MIN    LENGTH  WORK FACE             RPM
   0 CBN STL     6.5      0.       1.5      0.

UNo. UNIT     MODE            POS-C    SRV-A   SLOT-WID  BTM WAL FIN-A     FIN-R     PAT.
   1 SLOT     XY               0.       0.125   0.125     3   3   0.        0.         1
SNo.  TOOL           NOM-Ø   No.    APRCH-1    APRCH-2    TYPE  AFD TYPE PK-DEP  DEP-A    WID-R   C-SP  FR     M   M   M
R  1 END MILL EDGE    0.12 A          0.         2.       CW    G01 PECK  0.05    0.125    ♦       108 0.0003   8
FIG  PTN      SHIFT-Z      R/x        C/y         R/th       I          J       P       CNR     R-FEED  RGH
   1 LINE       0.125      0.         2.
   2 LINE        ♦         1.25       2.                                                R   0.375
   3 LINE        ♦         1.25      -2.                                                R   0.375
   4 LINE        ♦         0.        -2.

UNo. UNIT     MODE            POS-C    SRV-A   SLOT-WID  BTM WAL FIN-A     FIN-R     PAT.
   2 SLOT     XY             180.       0.125   0.125     3   3   0.        0.         1
SNo.  TOOL           NOM-Ø   No.    APRCH-1    APRCH-2    TYPE  AFD TYPE PK-DEP  DEP-A    WID-R   C-SP  FR     M   M   M
R  1 END MILL EDGE    0.12 A          0.         2.       CW    G01 PECK  0.05    0.125    ♦       108 0.0003   8
FIG  PTN      SHIFT-Z      R/x        C/y         R/th       I          J       P       CNR     R-FEED  RGH
   1 LINE       0.125      0.         2.
   2 LINE        ♦         1.75       2.
   3 CW          ♦         1.75       1.         0.5
   4 CCW         ♦         1.75      -1.         1.
   5 CW          ♦         1.75      -2.         0.5
   6 LINE        ♦         0.        -2.

UNo. UNIT   CONTI. REPEAT SHIFT    NUMBER         RETURN               WORK No.                          EXECTE
   3 END             ♦     ♦                       ZERO PT                                                   ♦
```

MAZATROL:2100 PAGE 1

UNo.	MAT.	OD-MAX	ID-MIN	LENGTH	WORK FACE	RPM
0	CBN STL	6.5	0.	1.5	0.	

UNo.	UNIT	MODE	POS-C	SRV-A	SRV-R	RGH	FIN-A	START	END
1	LINE CTR	XC	♦	0.125	0.125	4	0.02	OPEN	OPEN

SNo.	TOOL	NOM-Ø	No.	APRCH-1	APRCH-2	TYPE	AFD	DEP-A	WID-R	C-SP	FR	M	M	M
R 1	END MILL EDGE	0.12	A	1.26325	8.3065	♦	G01	0.105	♦	124	0.0004	8		
F 2	END MILL EDGE	0.12	A	1.26325	8.3065	♦	G01	♦	♦	219	0.0075	8		

FIG	PTN	SHIFT-Z	R/x	C/y	R/th	I	J	P	CNR	R-FEED	RGH
1	LINE	0.125	1.25	0.							
2	LINE	♦	1.25	-2.					R	0.375	
3	LINE	♦	-1.75	-2.							
4	CW	♦	-1.75	-1.	0.5						
5	CCW	♦	-1.75	1.	1.						
6	CW	♦	-1.75	2.	0.5						
7	LINE	♦	1.25	2.					R	0.375	
8	LINE	♦	1.25	0.							

UNo.	UNIT	CONTI.	REPEAT	SHIFT	NUMBER	RETURN ZERO PT	WORK No.	EXECTE
2	END		♦	♦				♦

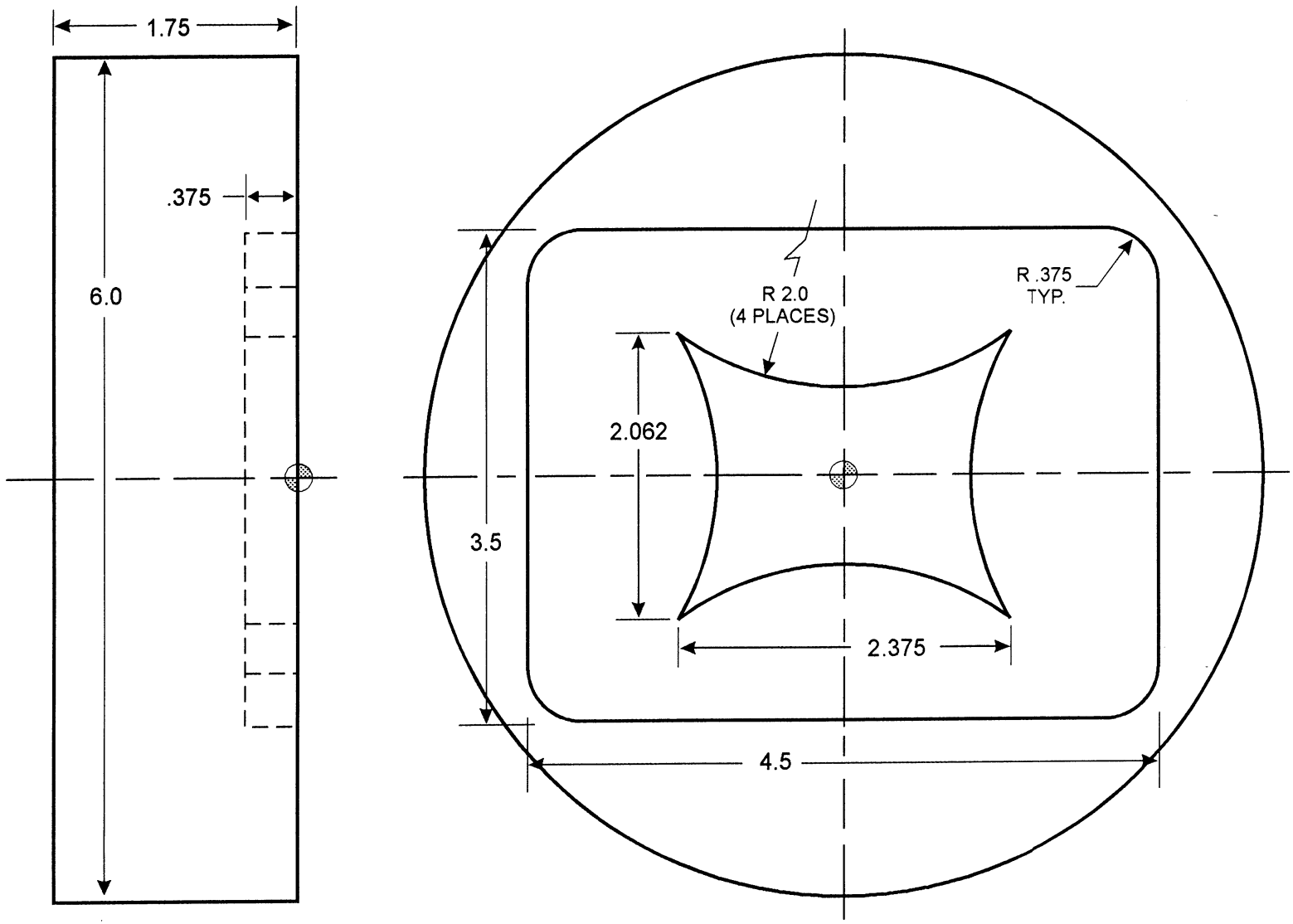

NOTE: WITH .625 END MILL, PUT SQUARE POCKET IN PART FACE LEAVING STAR-SHAPED STEP IN POCKET.

102

MAZATROL:102 PAGE 1

UNo.	MAT.	OD-MAX	ID-MIN	LENGTH	WORK FACE	RPM
0	CBN STL	6.		1.75		

UNo.	UNIT	MODE	POS-C	SRV-A	BTM	WAL	FIN-A	FIN-R
1	PCKT MT	XY	0.	0.375	4	4	0.02	0.02

SNo.	TOOL	NOM-Ø	No.	APRCH-1	APRCH-2	TYPE	AFD	TYPE	PK-DEP	DEP-A	WID-R	C-SP	FR	M	M	M
R 1	END MILL	EDGE 0.62	A	0.	1.9175	CW	G01		♦	0.355	0.434	124	0.0048	8		
F 2	END MILL	EDGE 0.62	A	0.	1.9175	CW	G01		♦	♦	0.434	154	0.0151	8		

FIG	PTN	SHIFT-Z	P1Rx/CRx	P1Cy/CCy	P3Rx/R	P3Cy	CN1	CN2	CN3	CN4
	1SQR	0.375	1.75	2.25	-1.75	-2.25	R 0.375	R 0.375	R 0.375	R 0.375

FIG	PTN	SHIFT-Z	R/x	C/y	R/th	I	J	P	CNR	ATTRIB	FR
2	LINE	♦	1.031	1.1875						CLOSED	♦
3	CCW	♦	1.031	-1.1875	2.					CLOSED	♦
4	CCW	♦	-1.031	-1.1875	2.					CLOSED	♦
5	CCW	♦	-1.031	1.1875	2.					CLOSED	♦
6	CCW	♦	1.031	1.1875	2.					CLOSED	♦

UNo.	UNIT	CONTI.	REPEAT	SHIFT	NUMBER	RETURN ZERO PT	WORK No.	EXECTE
2	END		♦	♦				♦

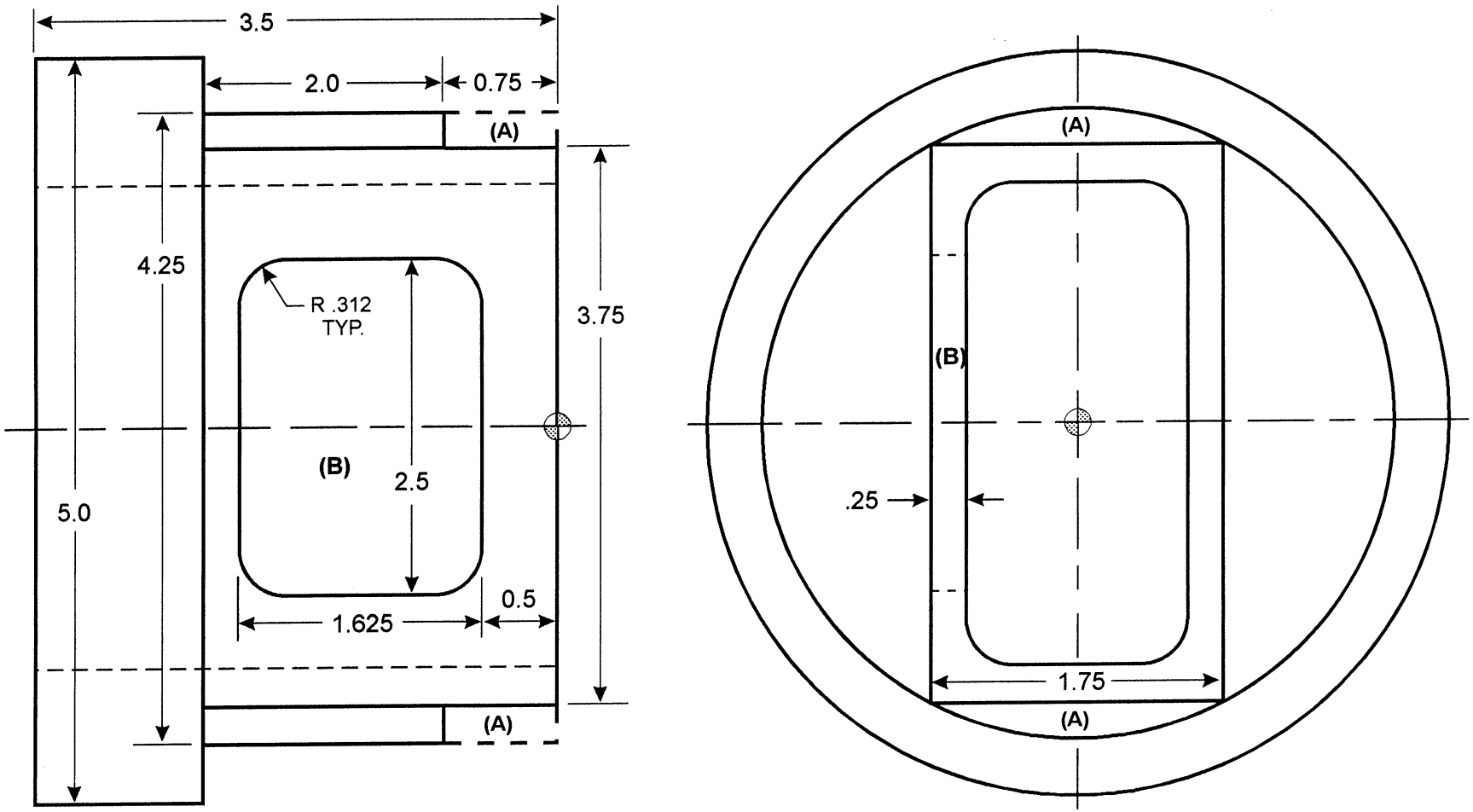

MACHINING OPERATIONS: 1. MILL FLATS (A), 2 PLACES.

2. MILL OPENING (B), 1 PLACE.

```
MAZATROL : 104  PAGE 1

UNo.MAT    OD-MAX  ID-MIN  LENGTH   RPM   FIN-X  FIN-Z WORK FACE
  0S45C       5.      0.      3.5

UNo.UNIT
  1MTR OUT
SEQ SHP          SPT-X     SPT-Z     FPT-X     FPT-Z             RADIUS
  1LIN             ♦         ♦       4.25      2.75                ♦

UNo.UNIT
  2MTR IN
SEQ SHP          SPT-X     SPT-Z     FPT-X     FPT-Z             RADIUS
  1LIN             ♦         ♦       1.25      2.75                ♦

UNo.UNIT    MODE POS-B    POS-C       SRV-A   SRV-R    RGH   FIN-A     FIN-R
  3 LINE LFT ZY    ♦        0.        0.25    1.       4      0.06      0.06
SNo. TOOL   NOM-Ø    APRCH-1  APRCH-2  TYPE AFD DEP-A  DEP-R  C-SP  FR     M   M
R 1 E-MILL   1.  A     0.19    -1.6       ♦ G01 0.19      ♦      19 0.1158   8
F 2 E-MILL   1.  A     0.25    -1.4079    ♦ G01   ♦       ♦      29 0.0163   8
FIG SHPSHIFT-R      Z        Y     RADIUS/Ø     I        J    P  CNR     RGH
  1 LIN   1.875    0.75    -1.
  2 LIN    ♦       0.75     1.                                          ▼▼ 4

UNo.UNIT    MODE POS-B    POS-C       SRV-A   SRV-R    RGH   FIN-A     FIN-R
  4 LINE LFT ZY    ♦      180.        0.25    1.       4      0.06      0.06
SNo. TOOL   NOM-Ø    APRCH-1  APRCH-2  TYPE AFD DEP-A  DEP-R  C-SP  FR     M   M
R 1 E-MILL   1.  A     0.19    -1.6       ♦ G01 0.19      ♦      19 0.1158   8
F 2 E-MILL   1.  A     0.25    -1.4079    ♦ G01   ♦       ♦      29 0.0163   8
FIG SHPSHIFT-R      Z        Y     RADIUS/Ø     I        J    P  CNR     RGH
  1 LIN   1.875    0.75    -1.
  2 LIN    ♦       0.75     1.                                          ▼▼ 4

UNo.UNIT    MODE POS-B    POS-C       SRV-A   SRV-R    RGH   FIN-A     FIN-R
  5 LINE IN  ZY    ♦       90.        0.25    0.5      4      0.06      0.06
SNo. TOOL   NOM-Ø    APRCH-1  APRCH-2  TYPE AFD DEP-A  DEP-R  C-SP  FR     M   M
R 1 E-MILL   0.5 A     1.35    -0.2    CW   G01 0.24      ♦      19 0.1987   8
F 2 E-MILL   0.5 A     0.86     0.2    CCW  G01   ♦       ♦      29 0.0163   8
FIG SHPSHIFT-R     P1Z/CZ    P1Y/CY    P3Z/R      P3Y       CNR
  1 SQR   0.625     0.5      -1.25      2.125     1.25   R  0.312

UNo.UNIT   COUNTER  RETURN   WK.No.   CONT.  NUM.     SHIFT
  6END
```

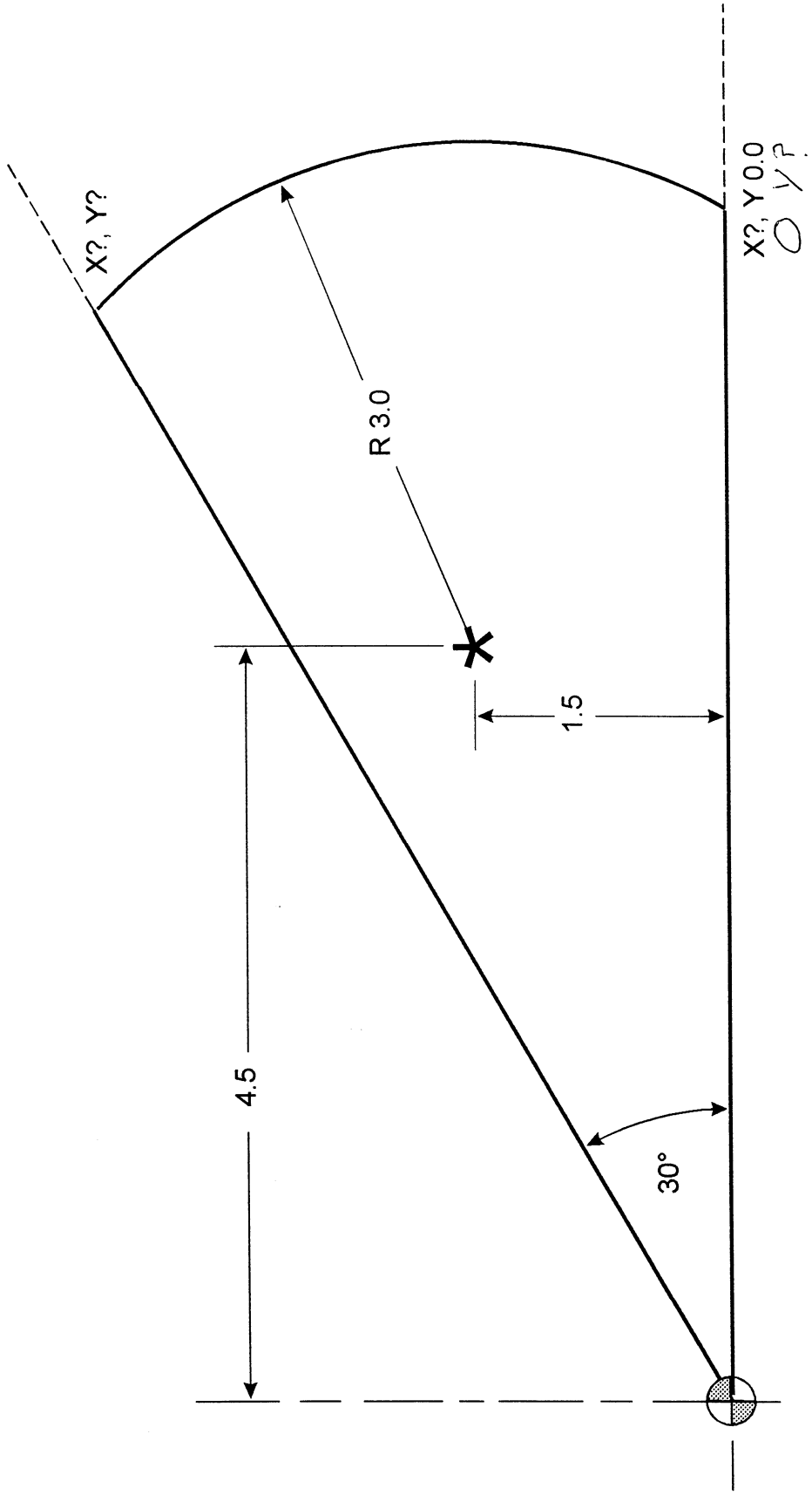

106

MAZATROL:106 PAGE 1

UNo.	MAT.	OD-MAX	ID-MIN	LENGTH	WORK FACE	RPM
0	CBN STL	16.	0.	1.		

UNo.	UNIT	MODE	POS-C	SRV-A	SRV-R	RGH	FIN-A	START	END
1	LINE CTR	XY	0.	0.1	0.25	1	0.	OPEN	OPEN

SNo.	TOOL	NOM-Ø	No.	APRCH-1	APRCH-2	TYPE	AFD	DEP-A	WID-R	C-SP	FR	M	M	M
R 1	END MILL EDGE	0.25	A	?	?	♦	G01	0.1	♦	137	0.0019	8		

FIG	PTN	SHIFT-Z	R/x	C/y	R/th	I	J	P	CNR	R-FEED	RGH
1	LINE	0.1	0.	0.							
2	LINE	♦	?	?	-60.			UP			
3	CW	♦	0.	?	3.	1.5	-4.5	RGT			
4	LINE	♦	0.	0.							

UNo.	UNIT	CONTI.	REPEAT	SHIFT	NUMBER	RETURN	WORK No.	EXECTE
2	END		♦	♦		ZERO PT		♦

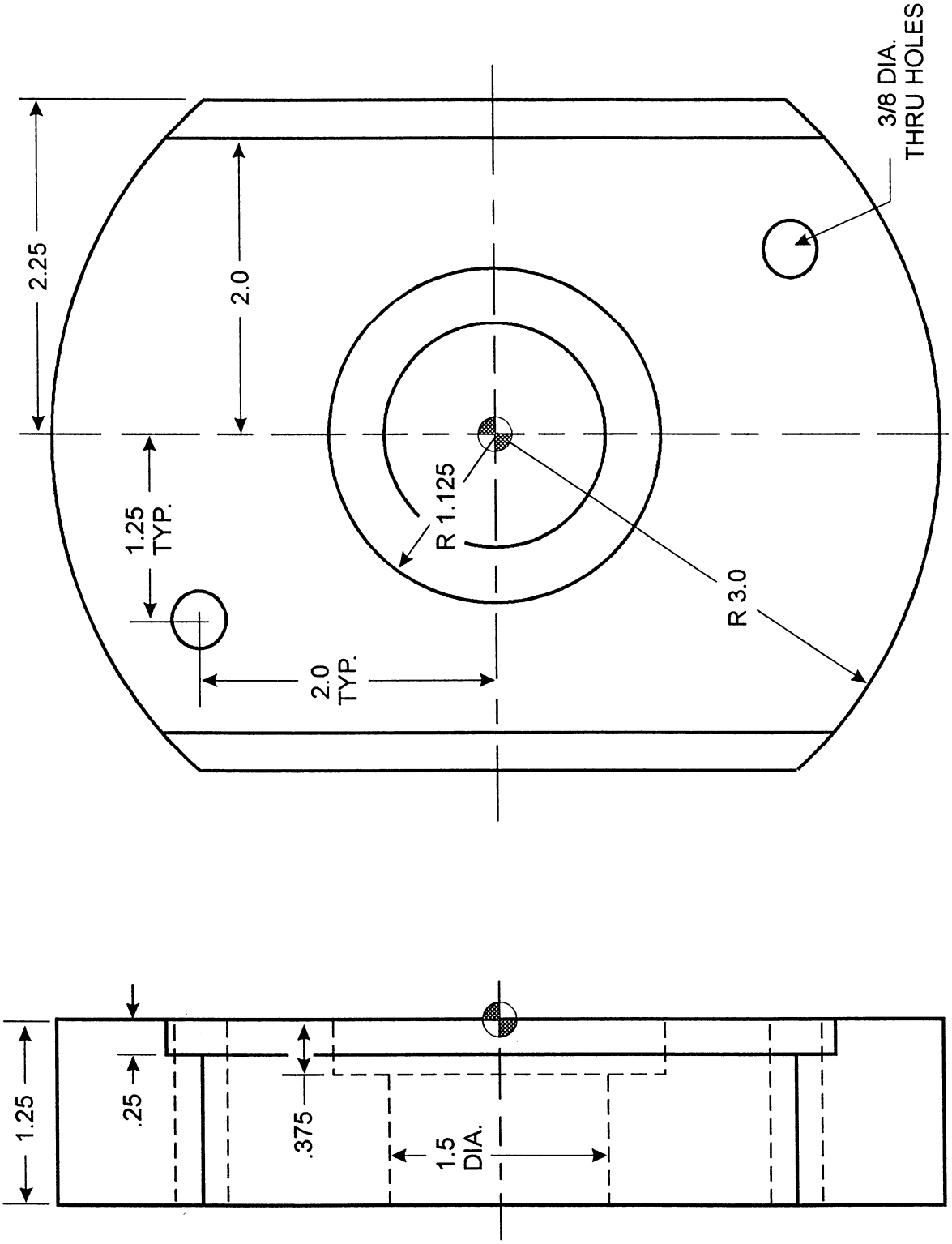
2.25
2.0
1.25
TYP.
2.0
TYP.
R 1.125
R 3.0
3/8 DIA.
THRU HOLES
1.25
.25
.375
1.5
DIA.

MAZATROL:107 PAGE 1

UNo.	MAT.	OD-MAX	ID-MIN	LENGTH	WORK FACE	RPM
0	CBN STL	6.	1.5	1.25	0.	

UNo.	UNIT	MODE	POS-C	SRV-A	SRV-R	RGH	FIN-A	FIN-R	START	END	INTER-R	CHMF
1	LINE RGT	XY	0.	1.25	1.	4	0.02	0.02	OPEN	OPEN	0.	0.

SNo.	TOOL		NOM-Ø	No.	APRCH-1	APRCH-2	TYPE	AFD	DEP-A	WID-R	C-SP	FR	M	M	M
R 1	END MILL	EDGE	1.	A	3.62	2.77	♦	G01	0.615	♦	124	0.0036	8		
F 2	END MILL	EDGE	1.	A	3.62	2.75	♦	G01	♦	♦	219	0.0151	8		

FIG	PTN	SHIFT-Z	R/x	C/y	R/th	I	J	P	CNR	R-FEED	RGH
1	LINE	1.25	3.	2.25							
2	LINE	♦	-3.	2.25							

UNo.	UNIT	MODE	POS-C	SRV-A	SRV-R	RGH	FIN-A	FIN-R	START	END	INTER-R	CHMF
2	LINE RGT	XY	0.	1.25	1.	4	0.02	0.02	OPEN	OPEN	0.	0.

SNo.	TOOL		NOM-Ø	No.	APRCH-1	APRCH-2	TYPE	AFD	DEP-A	WID-R	C-SP	FR	M	M	M
R 1	END MILL	EDGE	1.	A	-3.62	-2.77	♦	G01	0.615	♦	124	0.0036	8		
F 2	END MILL	EDGE	1.	A	-3.62	-2.75	♦	G01	♦	♦	219	0.0151	8		

FIG	PTN	SHIFT-Z	R/x	C/y	R/th	I	J	P	CNR	R-FEED	RGH
1	LINE	1.25	-3.	-2.25							
2	LINE	♦	3.	-2.25							

UNo.	UNIT	MODE	POS-C	SRV-A	SRV-R	RGH	FIN-A	FIN-R	START	END	INTER-R	CHMF
3	LINE RGT	XY	0.	0.25	0.5	4	0.02	0.02	OPEN	OPEN	0.	0.

SNo.	TOOL		NOM-Ø	No.	APRCH-1	APRCH-2	TYPE	AFD	DEP-A	WID-R	C-SP	FR	M	M	M
R 1	END MILL	EDGE	0.5	A	3.37	2.27	♦	G01	0.23	♦	124	0.0036	8		
F 2	END MILL	EDGE	0.5	A	3.37	2.25	♦	G01	♦	♦	219	0.0151	8		

FIG	PTN	SHIFT-Z	R/x	C/y	R/th	I	J	P	CNR	R-FEED	RGH
1	LINE	0.25	3.	2.							
2	LINE	♦	-3.	2.							

UNo.	UNIT	MODE	POS-C	SRV-A	SRV-R	RGH	FIN-A	FIN-R	START	END	INTER-R	CHMF
4	LINE RGT	XY	0.	0.25	0.5	4	0.02	0.02	OPEN	OPEN	0.	0.

SNo.	TOOL		NOM-Ø	No.	APRCH-1	APRCH-2	TYPE	AFD	DEP-A	WID-R	C-SP	FR	M	M	M
R 1	END MILL	EDGE	0.5	A	-3.37	-2.27	♦	G01	0.23	♦	124	0.0036	8		
F 2	END MILL	EDGE	0.5	A	-3.37	-2.25	♦	G01	♦	♦	219	0.0151	8		

FIG	PTN	SHIFT-Z	R/x	C/y	R/th	I	J	P	CNR	R-FEED	RGH
1	LINE	0.25	-3.	-2.							
2	LINE	♦	3.	-2.							

UNo.	UNIT	MODE	POS-C	DIA	DEPTH	CHMF
5	DRILLING	XY	0.	0.375	1.3	0.02

SNo.	TOOL		NOM-Ø	No.	HOLE-Ø	HOLE-DEP	PRE-DIA	PRE-DEP	RGH	DEPTH	C-SP	FR	M	M	M
1	CTR-DR	EDGE	0.5	A	0.415	♦	♦	♦	90°	CTR-D	82	0.004	8		
2	DRILL	EDGE	0.38	A	0.38	1.3	0.	100	PCK1	T 0.5	114	0.0085	8		

FIG	PTN	SPT-R/x	SPT-C/y	SPT-Z	CX/PX	CY/PY	F	M	N	ANG	P	Q	R
	1PT	2.	1.25	0.	♦	♦	♦	♦	♦	♦	0	♦	0
	2PT	-2.	-1.25	0.	♦	♦	♦	♦	♦	♦	0	♦	0

UNo.	UNIT	MODE	POS-C	TORNAD	DIA	DEPTH	CHMF	BTM	PRE-DIA	CHMF	PITCH1	PITCH2
6	CIRC MIL	XY	0.	0	2.25	0.375	0.	1	0.375	0.	♦	♦

SNo.	TOOL		NOM-Ø	No.	HOLE-Ø	HOLE-DEP	PRE-DIA	PRE-DEP	RGH	DEPTH	C-SP	FR	M	M	M
1	END MILL	EDGE	0.5	A	2.25	0.375	0.375	CCW	1	T 0.3	141	0.0043	8		

FIG	PTN	SPT-R/x	SPT-C/y	SPT-Z	CX/PX	CY/PY	F	M	N	ANG	P	Q	R
	1PT	0.	0.	0.	♦	♦	♦	♦	♦	♦	0	♦	0

UNo.	UNIT	CONTI.	REPEAT	SHIFT	NUMBER	RETURN ZERO PT	WORK No.	EXECTE
7	END		♦	♦				♦

MAZATROL:2107 PAGE 1

UNo.	MAT.	OD-MAX	ID-MIN	LENGTH	WORK FACE	RPM
0	CBN STL	6.	1.5	1.25	0.	

UNo.	UNIT	MODE	POS-C	SRV-A	SRV-R	RGH	FIN-A	FIN-R	START	END	INTER-R	CHMF
1	LINE RGT	XC	♦	1.25	1.	4	0.02	0.02	OPEN	OPEN	0.	0.

SNo.	TOOL		NOM-Ø	No.	APRCH-1	APRCH-2	TYPE	AFD	DEP-A	WID-R	C-SP	FR	M	M	M
R 1	END MILL	EDGE	1.	A	4.55821	37.423	♦	G01	0.615	♦	124	0.0036	8		
F 2	END MILL	EDGE	1.	A	4.54609	37.2228	♦	G01	♦	♦	219	0.0151	8		

FIG	PTN	SHIFT-Z	R/x	C/y	R/th	I	J	P	CNR	R-FEED	RGH
1	LINE	1.25	3.	2.25							
2	LINE	♦	-3.	2.25							

UNo.	UNIT	MODE	POS-C	SRV-A	SRV-R	RGH	FIN-A	FIN-R	START	END	INTER-R	CHMF
2	LINE RGT	XC	♦	1.25	1.	4	0.02	0.02	OPEN	OPEN	0.	0.

SNo.	TOOL		NOM-Ø	No.	APRCH-1	APRCH-2	TYPE	AFD	DEP-A	WID-R	C-SP	FR	M	M	M
R 1	END MILL	EDGE	1.	A	4.55821	-142.577	♦	G01	0.615	♦	124	0.0036	8		
F 2	END MILL	EDGE	1.	A	4.54609	-142.7772	♦	G01	♦	♦	219	0.0151	8		

FIG	PTN	SHIFT-Z	R/x	C/y	R/th	I	J	P	CNR	R-FEED	RGH
1	LINE	1.25	-3.	-2.25							
2	LINE	♦	3.	-2.25							

UNo.	UNIT	MODE	POS-C	SRV-A	SRV-R	RGH	FIN-A	FIN-R	START	END	INTER-R	CHMF
3	LINE RGT	XC	♦	0.25	0.5	4	0.02	0.02	OPEN	OPEN	0.	0.

SNo.	TOOL		NOM-Ø	No.	APRCH-1	APRCH-2	TYPE	AFD	DEP-A	WID-R	C-SP	FR	M	M	M
R 1	END MILL	EDGE	0.5	A	4.06323	33.9638	♦	G01	0.23	♦	137	0.0047	8		
F 2	END MILL	EDGE	0.5	A	4.05209	33.7293	♦	G01	♦	♦	219	0.0151	8		

FIG	PTN	SHIFT-Z	R/x	C/y	R/th	I	J	P	CNR	R-FEED	RGH
1	LINE	0.25	3.	2.							
2	LINE	♦	-3.	2.							

UNo.	UNIT	MODE	POS-C	SRV-A	SRV-R	RGH	FIN-A	FIN-R	START	END	INTER-R	CHMF
4	LINE RGT	XC	♦	0.25	0.5	4	0.02	0.02	OPEN	OPEN	0.	0.

SNo.	TOOL		NOM-Ø	No.	APRCH-1	APRCH-2	TYPE	AFD	DEP-A	WID-R	C-SP	FR	M	M	M
R 1	END MILL	EDGE	0.5	A	4.06323	-146.0362	♦	G01	0.23	♦	137	0.0047	8		
F 2	END MILL	EDGE	0.5	A	4.05209	-146.2707	♦	G01	♦	♦	219	0.0151	8		

FIG	PTN	SHIFT-Z	R/x	C/y	R/th	I	J	P	CNR	R-FEED	RGH
1	LINE	0.25	-3.	-2.							
2	LINE	♦	3.	-2.							

UNo.	UNIT	MODE	POS-C	DIA	DEPTH	CHMF
5	DRILLING	XC	♦	0.375	1.3	0.02

SNo.	TOOL		NOM-Ø	No.	HOLE-Ø	HOLE-DEP	PRE-DIA	PRE-DEP	RGH	DEPTH	C-SP	FR	M	M	M
1	CTR-DR	EDGE	0.5	A	0.415	♦	♦	♦	90°	CTR-D	206	0.004	8		
2	DRILL	EDGE	0.38	A	0.38	1.3	0.	100	PCK1	T 0.5	196	0.0068	8		

FIG PTN	SPT-R/x	SPT-C/y	SPT-Z	NUM.	ANG	Q	R
1ARC	2.	1.25	0.	2	180.	0	0

UNo.	UNIT	MODE	POS-C	TORNAD	DIA	DEPTH	CHMF	BTM	PRE-DIA	CHMF	PITCH1	PITCH2
6	CIRC MIL	XC	♦	0	2.25	0.375	0.	4	1.5	0.	♦	♦

SNo.	TOOL		NOM-Ø	No.	HOLE-Ø	HOLE-DEP	PRE-DIA	PRE-DEP	RGH	DEPTH	C-SP	FR	M	M	M
1	END MILL	EDGE	0.5	A	2.25	0.375	1.5	CCW	4	T 0.3	141	0.0043	8		

FIG PTN	SPT-R/x	SPT-C/y	SPT-Z	NUM.	ANG	Q	R
1PT	0.	0.	0.	♦	♦	♦	0

UNo.	UNIT	CONTI.	REPEAT	SHIFT	NUMBER	RETURN	WORK No.	EXECTE
7	END		♦	♦		ZERO PT		♦

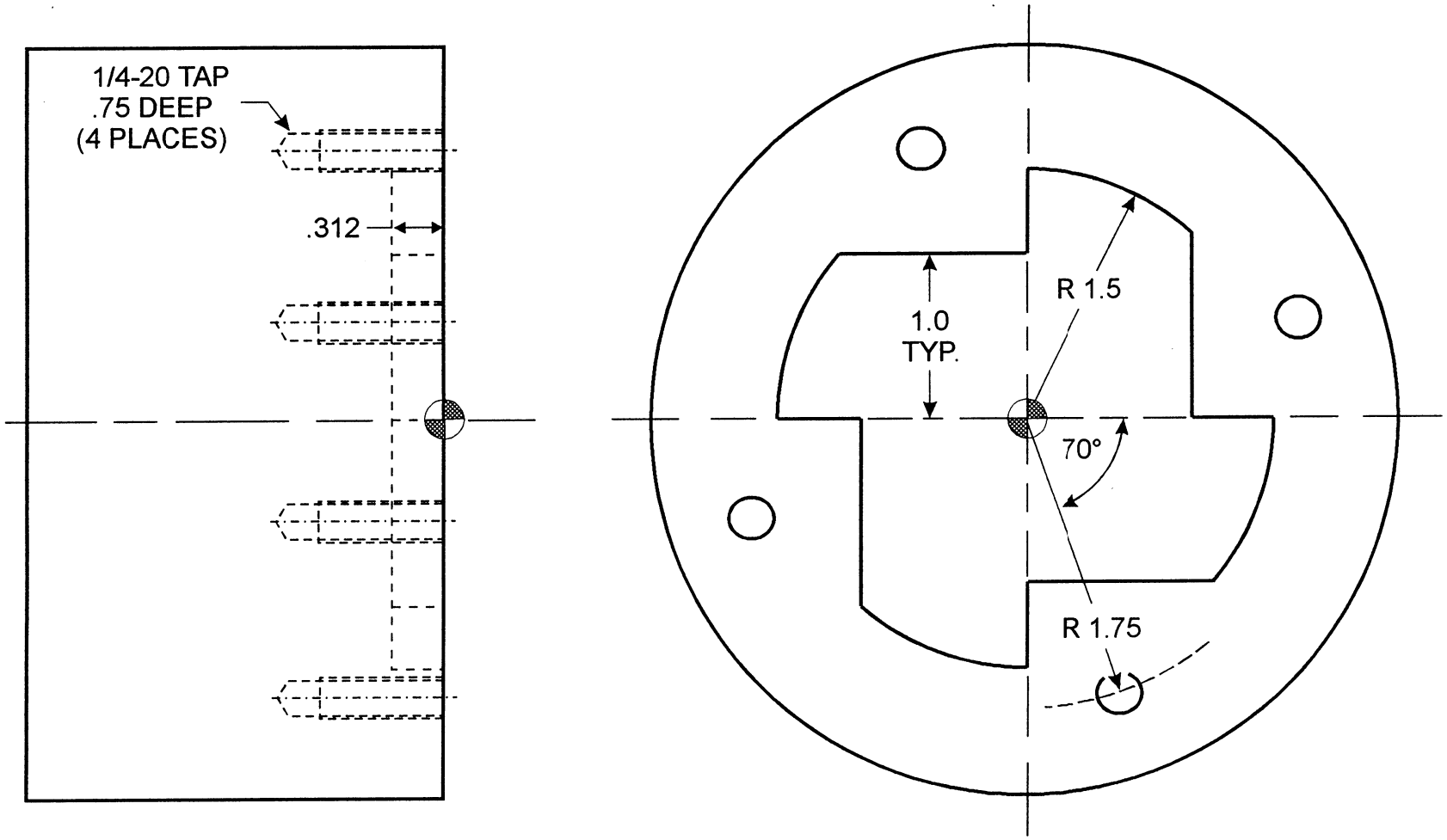

WORKPIECE SIZE : 4 ½ DIAMETER X 2 ½ LONG.

MAZATROL:109 PAGE 1

UNo.	MAT.	OD-MAX	ID-MIN	LENGTH	WORK FACE	RPM
0	CBN STL	4.5	0.	2.5	0.	

UNo.	UNIT	MODE	POS-C	SRV-A	BTM	WAL	FIN-A	FIN-R	INTER-R	CHMF
1	POCKET	XY	0.	0.312	4	4	0.02	0.02	0.	0.

SNo.	TOOL		NOM-Ø	No.	APRCH-1	APRCH-2	TYPE	AFD	TYPE	PK-DEP	DEP-A	WID-R	C-SP	FR	M	M	M
R 1	END MILL	EDGE	0.5	A	1.2	-0.27	CW	G01		♦	0.292	0.35	124	0.0039	8		
F 2	END MILL	EDGE	0.25	A	1.37477	-0.12	CW	G01		♦	♦	0.13	154	0.0075	8		

FIG	PTN	SHIFT-Z	R/x	C/y	R/th	I	J	P	CNR	ATTRIB	FR
1	LINE	0.312	1.5	0.						CLOSED	♦
2	LINE	♦	1.	0.						CLOSED	♦
3	LINE	♦	1.	?	90.			LEFT		CLOSED	♦
4	CCW	♦	0.	1.5	1.5	0.	0.			CLOSED	♦
5	LINE	♦	0.	1.						CLOSED	♦
6	LINE	♦	?	1.	180.			DOWN		CLOSED	♦
7	CCW	♦	-1.5	0.	1.5	0.	0.			CLOSED	♦
8	LINE	♦	-1.	0.						CLOSED	♦
9	LINE	♦	-1.	?	270.			RGT		CLOSED	♦
10	CCW	♦	0.	-1.5	1.5	0.	0.			CLOSED	♦
11	LINE	♦	0.	-1.						CLOSED	♦
12	LINE	♦	?	-1.	0.			UP		CLOSED	♦
13	CCW	♦	1.5	0.	1.5	0.	0.			CLOSED	♦

UNo.	UNIT	MODE	POS-C	NOM-	MAJOR-Ø	PITCH	TAP-DEP	CHMF
2	TAPPING	XY	0.	UN 1Q-20	0.25	0.05	0.75	0.04

SNo.	TOOL		NOM-Ø	No.	HOLE-Ø	HOLE-DEP	PRE-DIA	PRE-DEP	RGH	DEPTH	C-SP	FR	M	M	M
1	CTR-DR	EDGE	0.5	A	0.2867	♦	♦	♦	90°	CTR-D	206	0.004	8		
2	DRILL	EDGE	0.2	A	0.201	0.84	0.	100	PCK1	T 0.2	114	0.0049	8		
3	TAP	EDGE	UN 1Q-20	A	0.25	0.75	TAP	♦	FIX	P.05	68	0.05			

FIG	PTN	SPT-R/x	SPT-C/y	SPT-Z	CX/PX	CY/PY	F	M	N	ANG	P	Q	R
	1ARC	1.75	200.	0.	0.	0.	♦	4	♦	90.	♦	0	0

UNo.	UNIT	CONTI.	REPEAT	SHIFT	NUMBER	RETURN	WORK No.	EXECTE
3	END		♦	♦		ZERO PT		♦

MAZATROL:2109 PAGE 1

UNo.	MAT.	OD-MAX	ID-MIN	LENGTH	WORK FACE	RPM
0	CBN STL	4.5	0.	2.5	0.	

UNo.	UNIT	MODE	POS-C	SRV-A	BTM	WAL	FIN-A	FIN-R	INTER-R	CHMF
1	POCKET	XY	0.	0.312	4	4	0.02	0.02	0.	0.

SNo.	TOOL		NOM-Ø	No.	APRCH-1	APRCH-2	TYPE	AFD	TYPE	PK-DEP	DEP-A	WID-R	C-SP	FR	M	M	M
R 1	END MILL	EDGE	0.5	A	1.2	-0.27	CW	G01		♦	0.292	0.35	124	0.0039	8		
F 2	END MILL	EDGE	0.25	A	1.37477	-0.12	CW	G01		♦	♦	0.13	154	0.0075	8		

FIG	PTN	SHIFT-Z	R/x	C/y	R/th	I	J	P	CNR	ATTRIB	FR
1	CCW-SH	0.312	♦	♦	1.5	0.	0.	♦	4	♦	♦
2	LINE	♦	1.5	0.						CLOSED	♦
3	LINE	♦	1.	0.						CLOSED	♦
4	LINE	♦	1.	?	90.			LEFT		CLOSED	♦
5	CCW	♦	0.	1.5	1.5	0.	0.			CLOSED	♦
6	REP-EN	♦	♦	♦	♦	♦	♦	♦	♦	♦	♦

UNo.	UNIT	MODE	POS-C	NOM-	MAJOR-Ø	PITCH	TAP-DEP	CHMF
2	TAPPING	XY	0.	UN 1Q-20	0.25	0.05	0.75	0.04

SNo.	TOOL		NOM-Ø	No.	HOLE-Ø	HOLE-DEP	PRE-DIA	PRE-DEP	RGH	DEPTH	C-SP	FR	M	M	M
1	CTR-DR	EDGE	0.5	A	0.2867	♦	♦	♦	90°	CTR-D	206	0.004	8		
2	DRILL	EDGE	0.2	A	0.201	0.84	0.	100	PCK1	T 0.2	114	0.0049	8		
3	TAP	EDGE	UN 1Q-20	A	0.25	0.75	TAP	♦	FIX	P.05	68	0.05			

FIG	PTN	SPT-R/x	SPT-C/y	SPT-Z	CX/PX	CY/PY	F	M	N	ANG	P	Q	R
	1ARC	1.75	200.	0.	0.	0.	♦	4	♦	90.	♦	0	0

UNo.	UNIT	CONTI.	REPEAT	SHIFT	NUMBER	RETURN	WORK No.	EXECTE
3	END		♦	♦		ZERO PT		♦

SIDE #1
USE .1875" DIA. END MILL

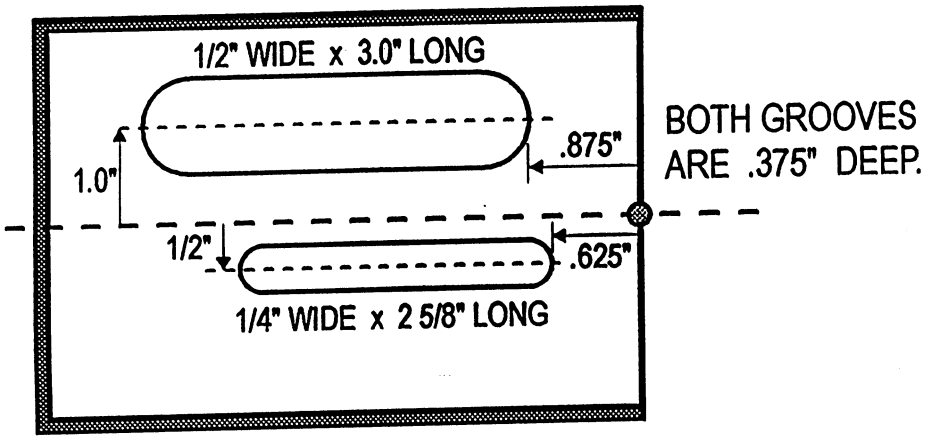

SIDE # 2
USE 3/8" DIA. END MILL

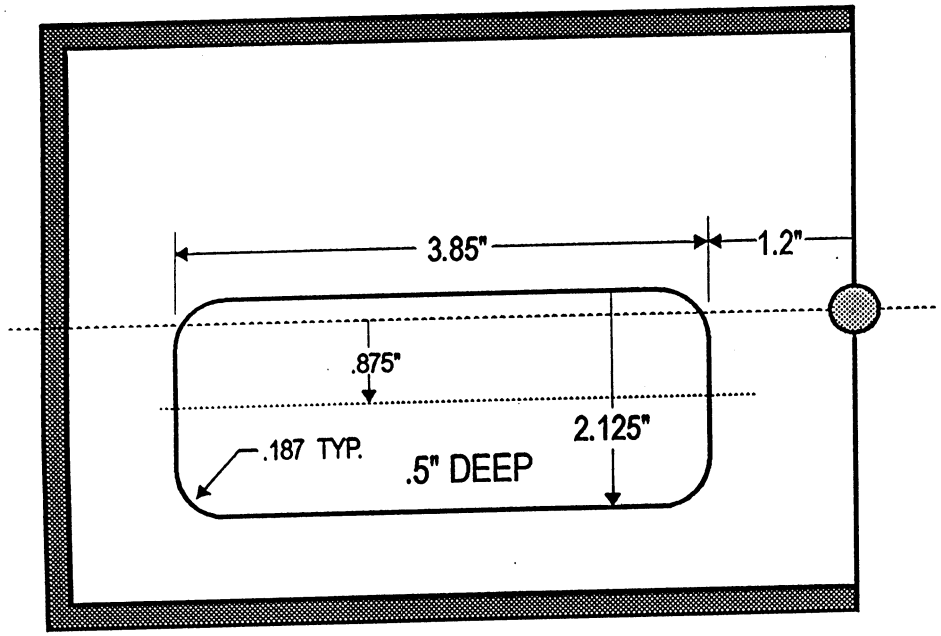

EXP. CM-01

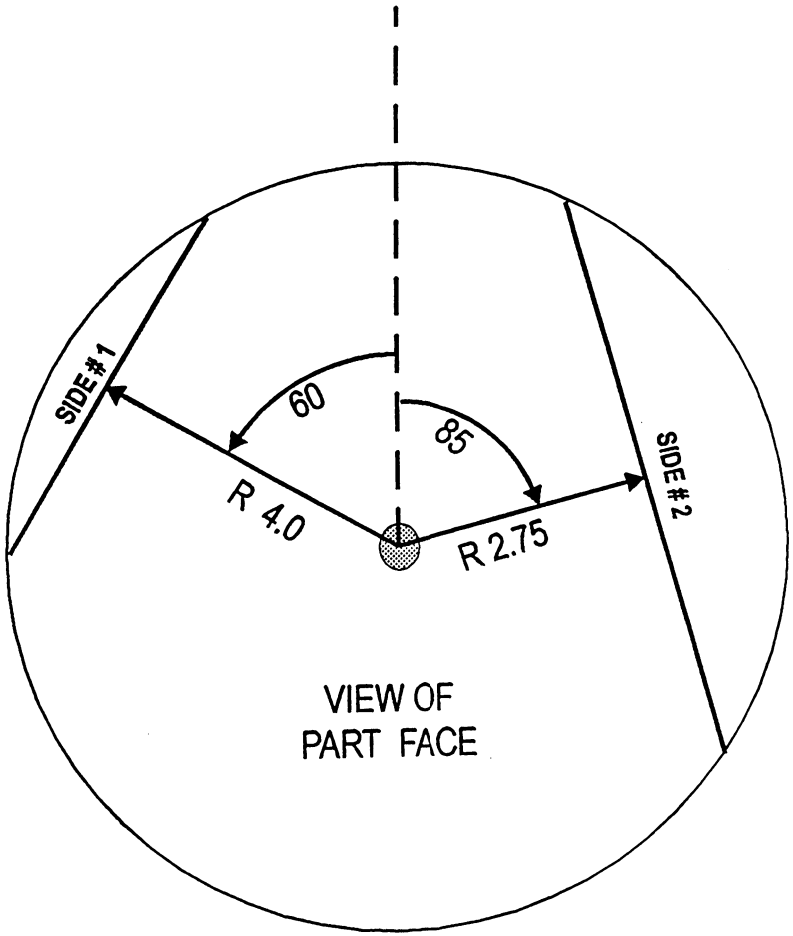

CARBON STEEL
9." DIA. x 10." LONG

EXAMPLE FOR
Y-AXIS MACHINING
IN C-AXIS MODE

```
MAZATROL:110 PAGE 1

UNo.   MAT.   OD-MAX   ID-MIN    LENGTH  WORK FACE             RPM
▌  0 CBN STL     9.       0.      10.       0.

UNo. UNIT     MODE            POS-C    SRV-A             BTM     FIN-A
   1 FCE MILL ZY              60.       0.5               4       0.02
SNo.  TOOL           NOM-Ø   No.    APRCH-1    APRCH-2    TYPE  AFD              DEP-A    WID-R   C-SP  FR     M   M   M
R  1 FCE MILL OUT     2.   B          0.4       -5.2      2BI    ♦                0.24     1.4      367 0.0066   8
F  2 FCE MILL OUT     2.   B          0.4       -5.2      2BI    ♦                ♦        1.4      547 0.033    8
FIG PTN       SHIFT-R     P1Z/CZ     P1Y/CY     P3Z/R       P3Y        CN1       CN2       CN3       CN4
   1SQR         4.         0.        -4.         8.5        4.

UNo. UNIT     MODE            POS-C    SRV-A             BTM     FIN-A
   2 FCE MILL ZY             -85.       1.75              4       0.02
SNo.  TOOL           NOM-Ø   No.    APRCH-1    APRCH-2    TYPE  AFD              DEP-A    WID-R   C-SP  FR     M   M   M
R  1 FCE MILL OUT     2.   B          0.4       -5.7      2BI    ♦                0.2883   1.4      367 0.0066   8
F  2 FCE MILL OUT     2.   B          0.4       -5.7      2BI    ♦                ♦        1.4      547 0.033    8
FIG PTN       SHIFT-R     P1Z/CZ     P1Y/CY     P3Z/R       P3Y        CN1       CN2       CN3       CN4
   1SQR         2.75       0.        -4.5        8.5        4.

UNo. UNIT     MODE            POS-C    SRV-A   SLOT-WID  BTM WAL FIN-A     FIN-R     PAT.
   3 SLOT     ZY              60.       0.375   0.5       4   4   0.02      0.02       0
SNo.  TOOL           NOM-Ø   No.    APRCH-1    APRCH-2    TYPE  AFD TYPE PK-DEP  DEP-A    WID-R   C-SP  FR     M   M   M
R  1 END MILL OUT     0.37 B          1.125     -1.       CW    G01        ♦      0.1775   ♦       137 0.0027   8
F  2 END MILL OUT     0.37 B          1.125     -1.       CCW   G01        ♦       ♦       ♦       154 0.0075   8
FIG  PTN      SHIFT-R       Z          Y          R/th       I          J       P       CNR     R-FEED  RGH
   1 LINE       3.625      1.125     -1.
   2 LINE        ♦         3.625     -1.

UNo. UNIT     MODE            POS-C    SRV-A   SLOT-WID  BTM WAL FIN-A     FIN-R     PAT.
   4 SLOT     ZY              60.       0.375   0.25      4   4   0.02      0.02       0
SNo.  TOOL           NOM-Ø   No.    APRCH-1    APRCH-2    TYPE  AFD TYPE PK-DEP  DEP-A    WID-R   C-SP  FR     M   M   M
R  1 END MILL OUT     0.12 B          0.75       0.5      CW    G01        ♦      0.1183   ♦       124 0.0004   8
F  2 END MILL OUT     0.12 B          0.75       0.5      CCW   G01        ♦       ♦       ♦       154 0.0075   8
FIG  PTN      SHIFT-R       Z          Y          R/th       I          J       P       CNR     R-FEED  RGH
   1 LINE       3.625      0.75       0.5
   2 LINE        ♦         3.125      0.5

UNo. UNIT     MODE            POS-C    SRV-A             BTM WAL FIN-A     FIN-R     INTER-R   CHMF
   5 POCKET   ZY             -85.       0.5               4   4   0.02      0.02       1.       0.02
SNo.  TOOL           NOM-Ø   No.    APRCH-1    APRCH-2    TYPE  AFD TYPE PK-DEP  DEP-A    WID-R   C-SP  FR     M   M   M
R  1 END MILL OUT     0.37 B          3.125      0.02     CW    G01 PECK  0.1     0.24     0.259    124 0.0022   8
F  2 END MILL OUT     0.37 B          3.125      0.02     CCW   G01        ♦       ♦       0.259    154 0.0075   8
   3 CHAMFER  OUT     1.   C          3.045      0.1225   CCW   G00  ♦     ♦       ♦       ♦       984 0.016    8
FIG PTN       SHIFT-R     P1Z/CZ     P1Y/CY     P3Z/R       P3Y        CN1       CN2       CN3       CN4
   1SQR         2.25       1.2       -0.1875     5.05       1.9375  R  0.1875 R  0.1875 R  0.1875 R  0.1875

UNo. UNIT   CONTI. REPEAT SHIFT    NUMBER         RETURN               WORK No.                          EXECTE
   6 END              ♦     ♦                     TOOL CHG                                                  ♦
```